CITY OF CLE ELUM

CONSTRUCTION STANDARDS

FOR
THE PRIVATE CONSTRUCTION
OF
PUBLIC FACILITIES

FEBRUARY 2002

INDEX

CHAPTER 1 - GENERAL 1
1. ENACTING AUTHORITY 1
2. PURPOSE 1
3. STATE ENVIRONMENT POLICY ACT (SEPA) 1
4. CONFLICTING PROVISIONS 1
5. SEVERANCE 1
6. PROCESS 1
7. ENGINEERING DESIGN PLAN REQUIREMENTS 2
8. PLAN REVIEW AND INSPECTION FEE 2
9. RECORD DRAWINGS 3
10. TRANSFER OF OWNERSHIP 3
11. EASEMENTS 3

CHAPTER 2 - GENERAL PLAN REQUIREMENTS 5
GENERAL PLAN FORMAT 5
SANITARY SEWER SYSTEM PLAN REQUIREMENTS 6
WATER SYSTEM PLAN REQUIREMENTS 6
STORM DRAIN SYSTEM PLAN REQUIREMENTS 7
STREET PLAN REQUIREMENTS 8

CHAPTER 3 - STANDARD SPECIFICATIONS 10
FORWARD 10

CHAPTER 4 - GENERAL REQUIREMENTS FOR ALL PROJECTS 11
GENERAL 11
1-01 DEFINITIONS AND TERMS 11
1-03 AWARD AND EXECUTION OF CONTRACT 12
1-04 SCOPE OF THE WORK 13
1-05 CONTROL OF WORK 13
1-07 LEGAL RELATION AND RESPONSIBILITIES TO THE PUBLIC 17
1-08 PROSECUTION AND PROGRESS 20
1-10 TEMPORARY TRAFFIC CONTROL 21

CHAPTER 5 - WATER SYSTEM IMPROVEMENTS 23
GENERAL REQUIREMENTS FOR WATER MAINS 23
SPECIAL PROVISIONS FOR WATER MAINS 24
7-09 PIPE AND FITTINGS FOR WATER MAINS 24
7-10 TRENCH EXCAVATION, BEDDING, AND BACKFILL FOR WATER MAINS 25
7-12 VALVES FOR WATER MAINS 26
7-14 FIRE HYDRANTS 26
7-15 SERVICE CONNECTIONS 27

CHAPTER 6 - SANITARY SEWER SYSTEM IMPROVEMENTS 30
GENERAL REQUIREMENTS FOR SANITARY SEWER MAINS 30
SPECIAL PROVISIONS FOR SANITARY SEWER MAINS 31
7-05 MANHOLES, INLETS, CATCH BASINS, AND DRYWELLS 31
7-08 GENERAL PIPE INSTALLATION REQUIREMENTS 32
7-17 SANITARY SEWERS 32
7-18 SIDE SEWERS 33

CHAPTER 7 - STREET IMPROVEMENTS 34
GENERAL REQUIREMENTS FOR STREETS 34
SPECIAL PROVISIONS FOR STREETS 34
8-30 CONTROLLED DENSITY FILL (NEW SECTION) 34

CHAPTER 8 - STORM DRAINAGE 37
GENERAL REQUIREMENTS FOR STORM DRAINAGE IMPROVEMENTS 37
SPECIAL PROVISIONS FOR STORM SEWERS 37
7-02 CULVERTS 37
7-04 STORM SEWERS 38
7-05 MANHOLES, INLETS, CATCH BASINS, AND DRYWELLS 39

APPENDIX A - TRANSFER OF OWNERSHIP FORMS

APPENDIX B - STANDARD DETAILS

CHAPTER 1 - GENERAL

1. ENACTING AUTHORITY

These Development Standards are enacted by the City of Cle Elum to protect and preserve the public health, safety, and general welfare; and in accordance with State law.

2. PURPOSE

The purpose of these Development Standards is to provide consistent development requirements and standards for the design and construction of public improvements by private developers.

3. STATE ENVIRONMENT POLICY ACT (SEPA)

These Standards will not affect any considerations involving issues under the State Environmental Policy Act (SEPA). The City's responsible official will continue to make all necessary SEPA decisions when individual proposals are submitted.

4. CONFLICTING PROVISIONS

The standards, procedures, and requirements of these Standards are the minimum necessary to promote the health, safety, and welfare of the residents of the City of Cle Elum. The City may adopt more rigorous or different standards, procedures, and requirements whenever necessary. If the provisions of these Standards conflict with one another, or if a provision of these Standards conflicts with the provision of another Ordinance of the City, the most restrictive provision or the provision imposing the highest standard shall prevail.

5. SEVERANCE

If any provision of these Standards or its application to any person or circumstance is for any reason held to be invalid, the remainder of these Standards or the application of the provisions is not affected.

6. PROCESS

Design Phase

Any person, firm, or corporation (the "Developer") which plans to construct a public works improvement shall apply to the Director of Public Works. The request by the Developer shall include a map showing the area to be served; the number and type of units, or the type and size of facility should be indicated.

Upon receipt of the design requirements from the Director of Public Works, the Developer shall cause plans and specifications for the public works improvements to be prepared in accordance with these Construction Standards and the City of Cle Elum Municipal Code. The Developer or his consulting engineer shall submit two

(2) paper sets of plans and specifications for review by the City or the City's engineer.

The City shall review the initial submittal and indicate corrections or additions or request additional information and return one "red lined" set to the Developer. The Developer shall make the required corrections and resubmit one (1) paper set of revised plans and specifications to the Director of Public Works.

When it has been determined that the plans and specifications indicate compliance with City of Cle Elum standards, the Developer will submit the original plan tracings and specifications for approval and the City of Cle Elum will stamp the tracings and specifications with an approval stamp. Such approved plans and specifications shall not be changed, modified, or altered without authorization from the Public Works Director. The City of Cle Elum will make copies of the approved plans and specifications for use by City Inspectors and City Departments as required.

Upon receipt by the Director of Public Works of the plan review fee, as discussed in Section 8, the approved original plans and specifications will be returned to the Developer.

Construction Phase

All construction shall be inspected by the City of Cle Elum or its authorized agent. The Developer's Contractor shall give a minimum of ten (10) days prior notice to the Public Works Director of the start of any construction activities.

Before the Developer's Contractor commences any work, he shall be required to attend a preconstruction conference with the Department of Public Works, the City's Engineer, and utility companies as determined by the City of Cle Elum. The purpose of the meeting is to discuss the scheduling, method of construction, responsibilities, concerns of other utilities, and other pertinent project conditions. The Contractor will submit his insurance and construction schedule at or prior to this meeting.

After cleanup by the Contractor and final inspection by the City, the City will calculate the inspection fees and submit them to the Developer. The Developer will pay the inspection fee, as discussed in Section 8, to the Public Works Department.

7. ENGINEERING DESIGN PLAN REQUIREMENTS

All plans, specifications, engineering calculations, diagrams, and other relevant data shall be designed and prepared by a Civil Engineer licensed by the State of Washington, in accordance with Chapter 2 - General Plan Requirements.

8. PLAN REVIEW AND INSPECTION FEE

Plan review and inspection fees are hereby established to defray the administrative expense of plan review and inspection costs incurred by the City of Cle Elum. The total plan review and inspection fee shall be paid by the Developer to the City of Cle Elum prior

to the issuance of a Certificate of Occupancy or to the signing and recording of a final plat or short plat.

The plan review fee and the inspection fee shall be the total actual costs incurred by the City of Cle Elum, its agents, employees, and elected or appointed officials, for review and approval of the plans and specifications and for inspection of construction of the public improvements. The fees shall include, but not be limited to, initial plan review, subsequent meetings with the Developer, explanations to the Developer's engineering consultant, re-reviews of revised plans, inspection construction, re-inspections, and a final inspection prior to the expiration of the maintenance period.

The plan review fee shall be tabulated and sent to the Developer and paid by the Developer in full prior to the City releasing the approved original plans and specifications prior to construction.

The construction inspection fee shall be tabulated and sent to the Developer and paid by the Developer in full prior to the City issuing a Certificate of Occupancy or signing the final short plat or plat for recording.

9. RECORD DRAWINGS

The Developer shall maintain a neatly marked, full-sized set of record drawings showing the final location and layout of all new construction of the public facilities. Prior to final acceptance by the City of Cle Elum, one set of reproducible mylar Record Drawings and two sets of prints prepared by the Developer's Engineer and clearly marked "RECORD DRAWINGS" shall be delivered to the Director of Public Works for review and acceptance.

10. TRANSFER OF OWNERSHIP

The Developer shall complete a Transfer of Ownership of Utility System Form upon completion of the construction of the public works improvements. This form may be found in Appendix A.

11. EASEMENTS

Public utility easements shall be established for the location of new and future public improvements serving new land divisions and land developments. Easements shall also be granted across the front of new lots and existing lots to provide future utility access as required.

All easements required shall be prepared by the Developer on the proper form and format for recording at the Kittitas County Auditor's Office. The easement legal description shall be prepared by a land surveyor licensed in the State of Washington. The executed and notarized easement document shall be submitted to the Director of Public Works for recording.

Eight (8) foot wide utility easements shall be dedicated along the front of each lot in subdivisions and short subdivisions. Easements for new and/or future utility lines shall be a minimum of fifteen (15) feet wide, provided the width of the easements for buried utilities will be at least twice the depth of the planned excavation.

Utility easements shall be continuous and aligned from block to block within a subdivision and with easements in adjoining subdivisions to facilitate the extension and future extension of public utilities.

CHAPTER 2 - GENERAL PLAN REQUIREMENTS

All plans, specifications, engineering calculations, diagrams, and other relevant data shall be designed and prepared by a Civil Engineer licensed by the State of Washington.

GENERAL PLAN FORMAT

1. Plan sheets and profile sheets or combined plan and profile sheets and detail sheets shall be on a sheet size of 24" x 36".

2. Each sheet shall contain the following project information:

   a. Project title and City project number, work order number, or LID number, if appropriate.
   b. Name, address, and phone number of the Owner/Developer.
   c. Name, address, and phone number and stamp of the Civil Engineer preparing the plans.
   d. Quarter section, Section - Township - Range
   e. Sheet title.
   f. "Page ____ of ____ Pages" numbering.
   g. Revision block.

3. All plan sheets must have a NORTH arrow preferably pointing to the top of the sheet or to the right, and must indicate the drawing scale. All engineering plans must be drawn to an appropriate engineer's scale. For profiles, the vertical scale shall be 1"=2', 1"=5' or 1"=10'. The horizontal scale shall be the same for both plan and profile and normally be 1"-20'. Plan and profile stationing shall generally read left to right.

4. The Vertical Datum for all plan submittals must be based on the CITY OF CLE ELUM DATUM. The benchmark used shall be referenced on the plans. An assumed datum will not be accepted.

5. Existing features and topography within the project construction limits must be shown on the plans. This shall include existing road width and surfacing, utility poles, existing underground utilities and surface appurtenances, significant trees, landscaping, and other elements that may affect design/construction.

6. Plan sheets shall indicate all adjacent property lines, right of way lines, and easements.

7. Plan sheets shall show all horizontal survey control as required to properly locate and tie the improvements in horizontal location.

8. Vicinity map showing the project site location.

If the engineering plans include more than three (3) sheets, a cover/title sheet may be required. This sheet shall include an overall site plan with contours, a vicinity map, table of contents, and applicable project information.

SANITARY SEWER SYSTEM PLAN REQUIREMENTS

1. Show all existing and proposed sanitary sewer system features including, but not limited to, the following:

    a. Sewer mains, gravity and force mains
    b. Side service, proposed locations
    c. Manholes
    d. Clean outs
    e. Pump Stations.

2. Indicate all easements required for the sanitary sewer main extensions and laterals.

3. Provide a profile for each sanitary sewer main extension. Clearly indicate the vertical and horizontal scale. Show the profile on the same sheet with, and aligned underneath, the plan view as practical.

4. Show the sanitary sewer system and water system on the same plan and profile for verification of minimum separation requirements. The design information for each may be on individual drawings for that system.

5 Slope, length, size, and pipe type shall be indicated for all mains and side sewers. Pipe length shall be measured from centerline of manholes.

6. Each manhole shall be uniquely numbered and shall be stationed off of a referenced centerline. Indicate rim and invert elevations in and out at all manholes. Indicate the length of each side sewer stub, the centerline stationing for each side sewer, and the size.

7. The plan and profile must show the location of all existing and proposed water, irrigation, storm drain, power, telephone, cable TV, and other utility crossings.

8. Generally show all vertical data in the profile view and all horizontal data in the plan view. It is not desirable to repeat the vertical data in the plan view unless it does not show in a profile.

9. Provide an overall site plan of development with contours, to show that all lots/parcels will be served by the proposed sewer system at design depth for all new development.

WATER SYSTEM PLAN REQUIREMENTS

1. Show all existing and proposed water system features if known, including but not limited to:

    a. Water mains
    b. Water valves
    c. Water meters
    d. Fire hydrants
    e. Blow offs
    f. Air and vacuum release valve assemblies

g. Pressure reducing valves
h. Fire sprinkler system lines
I. Backflow prevention devices
j. Post indicator valves
k. Thrust blocking

2. Identify all joint connections; provide detail of all non-standard joints.

3. Station or dimension the location of all fire hydrants, tees, crosses, services relative to centerlines or property lines.

4. Indicate all easements required for the water main extensions and future extensions.

5. Show the length, size, and pipe type for all main extensions, fire sprinkler system services, and domestic services where applicable.

6. Show the water system and the sanitary sewer system on the same plan and profile view for verification of minimum separation requirements. The design information for each system may be on individual drawings for that system.

7. A profile view shall be shown for all City water main extensions, aligned if practical with the plan view. Clearly indicate the horizontal and vertical scales.

8. Show the minimum cover and minimum separation on each sheet.

9. In the profile view, show all utilities crossing the proposed water main.

STORM DRAIN SYSTEM PLAN REQUIREMENTS

1. Show all existing features if known and all proposed storm drain system features including but not limited to:

   a. Storm drain mains
   b. Catch basins
   c. Inlets
   d. Drywells
   e. Retention systems
   f. Biofiltration swales
   g. Culverts
   h. Streams
   I. Ditches
   j. Natural drainage swales
   k. Headwalls
   l. Oil/water separator assembly

2. Show slope, length, size, and pipe material for all storm drain mains and lines.

3. All catch basins and inlets shall be uniquely numbered and shall be clearly labeled. Stationing and offsets shall be indicated from referenced centerline. Show all proposed storm drain features within the right of way in a profile.

4. Indicate all grate, rim, and invert elevations in the profile view.

5. Show all horizontal measurements and control in the plan view.

6. Indicate all easements required for the storm drainage system.

7. The plan shall clearly indicate the location of the storm drainage items stationed from a referenced centerline.

8. Provide storm water runoff and drainage calculations as described in Chapter 8.

STREET PLAN REQUIREMENTS

1. Show all existing and proposed roadway improvements including but not limited to:

    a. Pavement
    b. Concrete curb and gutter
    c. Edge of pavement
    d. Sidewalk
    e. Utilities (manholes, power poles, signs, valves, etc.)
    f. Handicap ramps
    g. Barricades
    h. Driveways
    I. Rockery or retaining walls
    j. Mailboxes
    k. Monuments
    l. Streetlights
    m. Compliance with ADA requirements.

2. Show all right of way lines, centerlines, and roadway widths for all rights of way.

3. Clearly differentiate between areas of existing pavement, areas of new pavement, and areas to be overlaid.

4. Provide a cross section or typical section of all rights of way indicating right of way width, centerline, pavement width, sidewalk, curb and gutter, pavement, and base thickness of new and existing pavement.

5. Provide a profile of all new public roadways or extensions of existing roadways. Indicate all vertical curve data, percent of grade, centerline stationing, finish grade elevations, and existing ground line. The profile of the existing centerline ground should extend a minimum of 100 feet before the beginning and at the end of the proposed improvements to show the gradient blend.

6. Align the profile view with the plan view, if practical. Clearly indicate the horizontal and the vertical scale.

7. Clearly label all profiles with respective street names and plan sheet reference numbers if drawn on separate sheets.

CHAPTER 3 - STANDARD SPECIFICATIONS

FORWARD

The City of Cle Elum has adopted the Standard Specifications for Road, Bridge, and Municipal Construction prepared by the Washington State Department of Transportation, and the Washington State Chapter of the American Public Works Association as the standard specifications governing all design and construction of public improvements by private developers.

All references hereinafter made to the "Standard Specifications" shall refer to the latest edition of the Standard Specifications described above. Except as may be amended, modified, or supplemented hereinafter, each section of the Standard Specifications shall be considered as much a part of these requirements as if they were actually set forth herein.

The Standard Specifications, Special Provisions, and City Standard Details contained in these **City Construction Standards** shall apply in their entirety to all City of Cle Elum public works projects. These Standards have been prepared to form a compiled document intended to assist and inform developers, consultants, and contractors of the construction requirements to be used on public works improvements.

The Standard Specifications, Special Provisions, and City Standard Details shall periodically be revised and updated. It shall be the responsibility of each user of this information to verify that he has the latest revisions prior to submitting any work covered by these specifications and details.

Developers and contractors are encouraged to contact the City of Cle Elum Public Works Department regarding these standards.

City of Cle Elum
Public Works Department
119 West 1st
Cle Elum, WA 98922

Telephone: (509) 674-2262
Fax: (509) 674-4097

CHAPTER 4 - GENERAL REQUIREMENTS FOR ALL PROJECTS

GENERAL

All work shall be done in accordance with the Plans, the latest edition of Standard Specifications for Road, Bridge, and Municipal Construction prepared by the Washington State Department of Transportation, and the Washington State Chapter of the American Public Works Association, referenced codes and organizations, and these Special Provisions.

All references hereinafter made to Standard Specifications shall refer to the latest edition of the Standard Specifications for Road, Bridge, and Municipal Construction prepared by the Washington State Department of Transportation and the Washington State Chapter of the American Public Works Association.

NOTE: THE "APWA AMENDMENTS TO DIVISION ONE OF THE WSDOT/APWA STANDARD SPECIFICATIONS" SHALL REPLACE DIVISION ONE OF THE "STANDARD SPECIFICATIONS FOR ROAD, BRIDGE, AND MUNICIPAL CONSTRUCTION."

1-01 DEFINITIONS AND TERMS

1-01.3 Definitions

The terms defined in Section 1-01.3 of the APWA Amendments to Division One of the Standard Specifications shall be further described by the following:

Consultant:	Means a civil engineer licensed in the State of Washington, employed by the Developer to prepare plans and specifications, perform construction staking, or similar services.
Contract Documents:	Means the plans and specifications prepared by the Developer or his consultant for the public works improvements contemplated.
City:	Means the City of Cle Elum, a municipal corporation.
Contractor:	Means the person or firm employed by the Developer to do the construction of the public works improvements.
Developer:	Means the person or firm engaging the services of and employing consultants, and/or contractors and paying for the design and construction of the public works improvements.
Drawings:	Means the plans and specifications prepared by the Developer or his consultant for the public works contemplated. The terms "Contract Documents," "Plans," "Engineer's Plans," "Engineer's Drawings," "Working Drawings," and "Project Manual" are synonymous.

Engineer:	Means the Director of Public Works of the City of Cle Elum or his duly authorized agent or representative.
Owner:	Means the City of Cle Elum acting through its legally established officials, boards, commissions, etc., as represented by its authorized officers, employees, or agents.
Standard Details:	Means specific drawings adopted by the City of Cle Elum and revised from time to time which show frequently recurring components of work which have been standardized for use.
Standard Specifications:	The latest edition of the Standard Specifications for Road, Bridge, and Municipal Construction published by the Washington State Department of Transportation and the Washington State Chapter of the American Public Works Association are, by this reference, made part of these Contract documents. Except as may be amended, modified, or supplemented hereinafter, each section of the Standard Specifications shall be considered as much a part of these Contract Documents as if they were actually set forth herein. All references hereinafter made to Standard Specifications shall refer to the latest edition of the Standard Specifications for Road, Bridge, and Municipal Construction prepared by the Washington State Department of Transportation and the Washington State Chapter of the American Public Works Association.
Special Provisions:	The Special Provisions supersede any conflicting provisions of the Standard Specifications for Road, Bridge, and Municipal Construction and the appended amendments to the Standard Specifications and are made a part of this Contract. Should any conflicts be encountered, the following inter-relationships shall govern: The Special Provisions shall supersede the APWA Amendments, which shall supersede the WSDOT Amendments, which shall supersede the Standard Specifications.

1-03 AWARD AND EXECUTION OF CONTRACT

1-03.4 Contract Bond (APWA only)

The Contractor shall guarantee the material provided and workmanship performed under the Contract for a period of two years from and after the final acceptance thereof by the Developer and the City of Cle Elum.

The Developer shall be responsible for the maintenance of all public improvements for a period of twenty four (24) months following final inspection in accordance with Chapter 17.22.080 of the Cle Elum Municipal Code.

1-04 SCOPE OF THE WORK

1-04.4 Changes

The provisions of Section 1-04.4 of the APWA Amendments to Division One shall be modified as follows:

> No changes in the work covered by the approved Contract Documents shall be made without having prior written approval of the Developer and the City.

1-04.11 Final Cleanup

The Contractor shall perform final cleanup as provided in this section to the Developer's and Owner's satisfaction. The date of completion will not be established until this is done. The material sites and all ground the Contractor occupied to do the work shall be left neat and presentable. The Contractor shall:

1. Remove all rubbish, surplus materials, discarded materials, falsework, temporary structures, equipment, and debris, and

2. Deposit in embankments, or remove from the project, all unneeded, oversized rock left from grading, surfacing, or paving.

Partial clean-up shall be done by the Contractor when he feels it is necessary or when, in the opinion of the Owner or Developer, partial clean-up should be done prior to either major clean-up or final inspection.

1-04.12 Waste Site (New Section)

The following new section shall be added to the Standard Specifications:

> Where there is additional waste excavation in excess of that needed for the project and in excess of that needed for compliance with requests of the Owner, the Contractor shall secure and operate his own waste site at his own expense. The Contractor shall also be required to secure and operate his own waste site at his own expense for the disposal of all unsuitable material, asphalt, concrete, debris, waste material, and any other objectionable material which is directed to waste by the Owner.
>
> The Contractor shall comply with the State of Washington's regulations regarding disposal of waste material as outlined in WAC 173-304, Subchapter 461.

1-05 CONTROL OF WORK

1-05.1 Authority of the Engineer

Add the following:

Unless otherwise expressly provided in the Contract Drawings, Specifications and Addenda, the means and methods of construction shall be such as the Contractor may choose; subject, however, to the Consultant and the Engineer's right to reject means and methods proposed by the Contractor which (1) will constitute or create a hazard to the work, or to persons or property; or (2) will not produce finished work in accordance with the terms of the Contract. Approval of the Contractor's means and methods of construction or his failure to exercise his right to reject such means or methods shall not relieve the Contractor of the obligation to accomplish the result intended by the Contract; nor shall the exercise of such right to reject create a cause for action for damages.

1-05.3(1) Project Record Drawings (New Section)

The following new section shall be added to the Standard Specifications:

The Contractor shall maintain a neatly marked, full-size set of record drawings showing the final location and layout of all new construction. Drawings shall be kept current weekly, with all field instruction, change orders, and construction adjustment.

Drawings shall be subject to the inspection of the Developer and the City at all times. Prior to acceptance of the work, the Contractor shall deliver to the Developer record drawings in accordance with paragraph 9 of Chapter 1 - General.

1-05.5 Construction Staking (New Section)

The following new section shall be added to the Standard Specifications:

The Consultant retained by the developer will establish the line and grade of proposed construction by offset stakes. The Consultant will establish the centerline for minor structures and establish bench marks at convenient locations for use by the Contractor.

The Contractor shall establish grades from the Consultant's stakes at suitable intervals in accordance with good practice. Where new construction adjoins existing construction, the Contractor shall make such adjustments in grade as are necessary.

1-05.10 Guarantees (APWA only)

The following new section shall be added to the APWA Supplement:

If, within two years after the date of Final Acceptance of the Work, defective and unauthorized work is discovered, the Contractor shall promptly, upon written request, return and in accordance with the instructions either correct such work, or if such work has been rejected, remove it from the Project Site and replace it with non-defective and authorized work, all without cost to the Owner or Developer. If the Contractor does not promptly comply with the written request to correct defective and unauthorized work, or if an emergency exists, the Owner/Developer reserves the right to have defective and unauthorized work corrected or rejected, removed, and replaced pursuant to the provisions of Section 1-05.8 of these Specifications.

?

The Contractor agrees the above two-year limitation shall not exclude nor diminish any rights under any law to obtain damages and recover costs resulting from defective and unauthorized work discovered after two years.

1-05.16 Water and Power (APWA only)

Water shall be furnished and applied in accordance with the provisions of Sections 1-05.16 of the APWA Amendments to Division One and 2-07 of the Standard Specifications modified as follows:

Water Supply: Water for use on the projects may be obtained/purchased from the City of Cle Elum and the Contractor shall arrange for and convey the water from the nearest convenient hydrant or other source at his own expense. The hydrants shall be used in accordance with the City of Cle Elum Water Department regulations.

The City reserves the right to deny the use of fire hydrants where deemed inappropriate by the City.

1-05.18 Testing (New Section)

The following new section shall be added to the Standard Specifications:

The Contractor shall be responsible for scheduling and paying for all material testing required by these Contract Documents. All testing services shall be performed by an independent, certified testing firm and/or laboratory meeting the approval of the Engineer. The Contractor shall submit information relating to the qualifications of the proposed testing firm to the Engineer for review and approval prior to the preconstruction conference. The testing frequencies listed below may be increased to assure compliance with the Specifications.

Trench Backfill

Copies of moisture-density curves for each type of material encountered and copies of all test results shall be provided to the Engineer as construction progresses.

Compaction tests shall be taken at a frequency and at depths sufficient to document that the required density has been achieved. At a minimum, one (1) compaction test shall be taken for each 100 linear feet of mainline pipeline trench and one (1) test for each street crossing. At alternating 100-foot locations along the main trench line, tests shall be taken at 1-foot, 2-foot, and 3-foot depths below finish grade.

The Engineer may request additional tests be performed at the Contractor's expense, if test results do not meet the required trench backfill densities.

All trenches shall be backfilled and compacted to at least 95 percent of maximum density as determined by ASTM D 698 (Standard Proctor).

Roadway Embankment

Copies of the moisture density curves for each type of material encountered and copies of all test results shall be provided to the Engineer as construction progresses.

Compaction tests shall be taken at a frequency sufficient to document that the required density has been achieved. At a minimum, one (1) compaction test shall be taken for every 5,000 square feet of surface area for each lift of roadway embankment.

The Engineer may request additional tests be performed at the Contractor's expense, if test results do not meet the required subgrade densities.

Roadway embankment compaction shall be as specified in SECTION 2-03.3(14).

Roadway Subgrade

Copies of the moisture density curves for each type of material encountered and copies of all test results shall be provided to the Engineer as construction progresses.

Compaction tests shall be taken at a frequency sufficient to document that the required density has been achieved. At a minimum, one (1) compaction test shall be taken for every 5,000 square feet of subgrade.

The Engineer may request additional tests be performed at the Contractor's expense, if test results do not meet the required subgrade densities. Subgrade compaction shall be as specified for Roadway Embankment.

Ballast and Crushed Surfacing

Copies of the moisture density curves for each type of material incorporated into the project and copies of all test results shall be provided to the Engineer as construction progresses.

Compaction tests shall be taken at a frequency sufficient to document that the required density has been achieved. At a minimum, one (1) compaction test shall be taken for every 5,000 square feet of surface area for each lift of ballast or crushed surfacing.

The Engineer may request additional tests be performed at the Contractor's expense, if test results do not meet the required subgrade densities.

Compaction of ballast and crushed surfacing shall be as specified in SECTION 4-04.3(5).

Asphalt Paving

Copies of the maximum Rice density test for each class of asphalt concrete pavement and copies of all test results shall be provided to the Engineer as construction progresses.

Density tests shall be taken at a frequency sufficient to document that the required density has been achieved. At a minimum, one (1) compaction test shall be taken for every 5,000 square feet of surface area for each lift of asphalt concrete pavement.

The Engineer may request additional tests be performed at the Contractor's expense, if test results do not meet the required subgrade densities.

Compaction of asphalt concrete pavement shall be as specified in SECTION 5-04.3(10)B.

Cement Concrete Curb, Gutter, and Sidewalk

A copy of the cement concrete design mix or certification from the concrete supplier that the concrete provided has been prepared to the strength requirement as specified elsewhere in these specifications.

Concrete strength cylinders shall be taken and tested for each truck load of concrete delivered to the job. All testing procedures shall be conducted in accordance with applicable Sections of Division 6-02 of the Standard Specifications.

Copies of all test results shall be provided to the Engineer as construction progresses.

1-07 LEGAL RELATION AND RESPONSIBILITIES TO THE PUBLIC

1-07.1 Laws to be Observed

Amend the second sentence of the first paragraph to read:

The Contractor shall indemnify and save harmless the City (any agents, officers, employees, and representatives) against any claims that may arise because the Contractor (or any employee of the Contractor or subcontractor or materialman) violated a legal requirement.

1-07.5 Fish and Wildlife and Ecology Regulations

In addition to the requirements of Section 1-07.5 of the APWA Amendments to Division One, the Contractor shall comply with the environmental provisions of local air pollution authorities, Kittitas County Clean Air Authority.

A method of dust control during construction shall be submitted to, and approved by, the Kittitas County Clean Air Authority. A written copy of their approval shall be submitted to the Public Works

Department prior to commencement of construction. The Developer shall designate a project coordinator for contact during construction regarding alleged air quality violations and other complaints.

1-07.17 Utilities and Similar Facilities

Section 1-07.17 of the APWA Amendments to Division One is supplemented by the following:

> Locations and dimensions shown on the plans for existing facilities are in accordance with available information obtained without uncovering, measuring, or other verification. It shall be the Contractor's responsibility to investigate the presence and location of all utilities prior to submitting a bid.
>
> The Contractor shall call for field location not less than two nor more than ten business days before the scheduled date for commencement of excavation which may affect underground utility facilities, unless otherwise agreed upon by the parties involved. A business day is defined as any day other than Saturday, Sunday, or a legal local, state, or federal holiday. The phone number for Cle Elum is 1-800-553-4344. If no one-number locator service is available, notice shall be provided individually by the Contractor to those owners known to or suspected of having underground facilities within the area of proposed excavation.
>
> The Contractor is alerted to the existence of Chapter 19.122 RCW, a law relating to underground utilities. Any cost to the Contractor incurred as a result of this law shall be at the Contractor's expense.
>
> No excavation shall begin until all known facilities, in the vicinity of the excavation area, have been located and marked.

1-07.18 Public Liability and Property Damage Insurance

The Contractor shall obtain and maintain in full force and effect during the duration of this Contract public liability and property damage insurance in accordance with Section 1-07.18 of the APWA Amendments to Division One and as modified herein.

> Prior to start of construction, the Contractor shall furnish the Owner a Certificate of Insurance and the additional insured endorsements as evidence of compliance with these requirements. This certificate shall name **the City of Cle Elum, its employees, agents, elected and appointed officials, engineering consultant, and all subcontractors** as "additional insureds" and shall stipulate that the policies named thereon cannot be canceled unless at least forty-five (45) days written notice has been given to the Owner. The certificate shall not contain the following or similar wording regarding cancellation notification: **"Failure to mail such notice shall impose no obligation or liability of any kind upon the company, its agents, or representatives."**

1-07.23 Public Convenience and Safety

The provisions of the latest edition of the Manual on Uniform Traffic Control Devices for Streets and Highways and amendments thereto published by the U.S. Department of Transportation, Federal Highway Administration, by this reference are made a part of these Contract Documents.

The provisions of Section 1-07.23 of the Standard Specifications are modified as follows:

All signs, barricades, traffic control devices, and labor for traffic control required by construction activities for the control of traffic shall be supplied, placed, and maintained by the Contractor. This shall apply to detours and traffic control both within and outside the limits of the project. All costs for furnishing, placing, and maintaining the referenced traffic control devices and labor for traffic control shall be considered incidental to the bid items of the Contract.

All work shall be done under a program which shall have the approval of the Consultant and the City of Cle Elum and create a minimum of interruption or inconvenience to pedestrian and vehicular traffic. All arrangements to care for such traffic will be the Contractor's responsibility and shall be made at his expense. All work shall be carried out with due regard for public safety. Open trenches shall be provided with proper barricades and at night they shall be distinctly indicated by adequately placed lights. At entrances to business properties and other private roads, driveways, bridges, or other such means as to provide access shall be provided by the Contractor. The Contractor shall maintain vehicular and pedestrian access to businesses at all times that businesses are open for business.

Upon failure of the Contractor to provide immediately and maintain adequate suitable barricades, lights and detour signs, when ordered to do so, the Owner shall be at liberty, without further notice to the Contractor or the Surety, to provide the same and request payment for providing proper barricades, lights, and signs, and the Owner assumes no liability connected therewith.

Any traffic restriction must have prior approval of the City of Cle Elum. Appropriate traffic control measures and signing are required during such temporary road closures.

It shall be the responsibility of the Contractor to secure the approval of and notify the Developer, City of Cle Elum, and the Police and Fire Departments at least 24 hours prior to closing any street, in addition to correlating the proposed closures with the City of Cle Elum to ensure proper detouring of traffic. When the street is re-opened, it shall again be the responsibility of the Contractor to notify the above named departments and persons.

1-07.28 Safety Standards (New Section)

The following new section shall be added to the Standard Specifications:

All work shall be performed in accordance with all applicable local, state, and federal health and safety codes, standards, regulations, and/or accepted industry standards. It shall be the responsibility of the Contractor to ensure that his work force and the public are adequately protected against any hazards.

The Owner or Developer shall have the authority at all times to issue a stop work order at no penalty if, in their opinion, working conditions present an undue hazard to the public, property, or the work force. Such authority shall not, however, relieve the Contractor of

responsibility for the maintenance of safe working conditions or assess any responsibility to the Owner or Developer for the identification of any or all unsafe conditions.

1-07.29 Notifying Property Owners (New Section)

The following new section shall be added to the Standard Specifications:

When construction activities will affect ingress and egress to a property along the project alignment, the Contractor shall be responsible for notifying the occupant/occupants of the property 24 hours prior to the construction activity beginning. If personal contact with the occupant is not possible, the Contractor shall leave written notification.

1-08 PROSECUTION AND PROGRESS

1-08.3 Progress Schedule

The provisions of SECTION 1-08.3 of the Standard Specifications, Division One shall be supplemented with the following:

Prior to the commencement of any work, a preconstruction conference shall be held. The Contractor or Developer shall contact the City of Cle Elum and set a date and time for the meeting. It shall be the responsibility of the Contractor and Engineer to notify and invite all parties having an interest in the project to the meeting.

At this conference all points of the Plans and Specifications will be open to discussion including scope, order and coordination of work, equipment lead time required, means and methods of construction, inspection and reporting procedures, etc. The Contractor should satisfy himself that all provisions and intentions of the work are fully understood.

The Contractor shall prepare and submit to the Owner and Engineer at the Preconstruction Conference a Construction Progress and Completion Schedule using a bar graph format. Items in the Schedule shall be arranged in the order and sequence in which they will be performed. The schedule shall be drawn to a time scale, shown along the base of the diagram, using an appropriate measurement per day with weekends and holidays indicated. The Construction Progress Schedule shall be continuously updated and, if necessary, redrawn upon the first working day of each month or upon issuance of any Change Order which substantially affects the scheduling. Copies (2 prints or 1 reproducible) of newly updated Schedules shall be forwarded to the Owner and Engineer, as directed, immediately upon preparation.

1-08.3(1) Means and Methods (New Section)

The following new section shall be added to the Standard Specifications:

Unless otherwise expressly provided in the Contract Drawings, Specifications and Addenda, the means and methods of construction shall be such as the Contractor may choose; subject, however, to the Consultant's or Engineer's right to reject means and methods proposed by the Contractor which (1) will constitute or create a hazard to the work, or to

persons or property; or (2) will not produce finished work in accordance with the terms of the Contract. The Consultant's or Engineer's approval of the Contractor's means and methods of construction or his failure to exercise his right to reject such means or methods shall not relieve the Contractor of the obligation to accomplish the result intended by the Contract; nor shall the exercise of such right to reject create a cause for action for damages.

1-08.3(2) Contractor Responsibility (New Section)

The following new section shall be added to the Standard Specifications:

> The Contractor is responsible for constructing and completing all work included in the Contract Documents and any other work directed by the Developer in a professional manner with first-class workmanship.

The Contractor shall keep the City of Cle Elum, the Developer, and the Consultant informed in writing of the address to which official correspondence is to be directed, the address and phone number of the person in charge of his field personnel, and the address and telephone number of the Contractor's representative who will be responsible and available outside of normal working hours for emergency repairs and the maintenance of traffic control and safety devices.

1-10 TEMPORARY TRAFFIC CONTROL

1-10.2(2) TRAFFIC CONTROL PLANS

Delete the entire section and replace with the following:

> The Contractor shall prepare a signing plan showing the necessary Class A construction signing and barricades required for the project and submit it to the Engineer for review no later than the preconstruction conference date. When the Class B signing for a particular area will be provided as detailed on one or more of the figures included in the MUTCD without modification, the Contractor may reference the applicable MUTCD figure at the appropriate location on the Plan. When this procedure is used, variable distances such as minimum length of taper must be specified by the Contractor.
>
> The signing plan prepared by the Contractor shall provide for adequate warning within the limits of the project and on all streets, alleys, and driveways entering the project so that approaching traffic may turn left or right onto existing undisturbed streets before reaching the project.

1-10.3 FLAGGING, SIGNS, AND ALL OTHER TRAFFIC CONTROL DEVICES

1-10.3(3) CONSTRUCTION SIGNS

The first sentence of the first paragraph is revised to read:

All signs, barricades, flashers, cones, traffic safety drums, and other traffic control devices required by the approved traffic control plan(s), as well as any other appropriate signs prescribed by the City or County, shall be furnished by the Contractor.

The last two sentences of the first paragraph are deleted.

The third paragraph is revised as follows:

Delete item 2.

Revise item 3 to read:

Furnishing, initial installation, and subsequent removal of both Class A and B construction signs; and

CHAPTER 5 - WATER SYSTEM IMPROVEMENTS

GENERAL REQUIREMENTS FOR WATER MAINS

All extensions to the City of Cle Elum's domestic water system shall conform to the design standards of the City of Cle Elum and the State Department of Health as follows:

All new lots and developments shall be served by a public water supply line maintained by the City of Cle Elum and located adjacent to the lot or development site. The water supply line shall be capable of providing sufficient flow and pressure to satisfy the fire flow and domestic service requirements of the proposed lots and development requirements.

Water lines shall be extended by the Owner or Developer to the point where the adjoining property owner's responsibility for further extension begins. This typically requires an extension across the entire frontage of the property to the property line of the adjoining owner. In some cases, it will require dedication of an easement and a line extension across the property or extension across two or more sides of the developing property. Extensions will be consistent with and implement the City's adopted Water Comprehensive Plan.

All new public domestic water mains shall be a minimum diameter of 8-inch. Fire hydrant runs less than 50 feet from the water main to the fire hydrant shall be a minimum of 6-inch.

Larger public water mains may be required depending upon fire flow requirements as determined by the City Fire Chief and City Building Code Department.

Water main oversizing, above that required for the particular development being submitted, may be required by the City of Cle Elum to be installed for future extension. The cost of the materials only for the oversizing shall be reimbursed to the Developer by the City. The Developer shall submit actual material invoices showing the actual cost of the materials furnished and the cost of the same materials of the size required for the development.

The Developer shall be responsible for pressure reducing valve stations in areas of excessive pressure.

Eight-inch dead-end water main over 1,500 feet in length will only be allowed where future looping via public right of way can be assured. Dead-end mains exceeding 1,500 feet in length will be at least 10-inch diameter pipe where looping is not practical or is unlikely to occur in the future.

Maximum valve spacing in public water mains will be 1,200 linear feet. Valves will be furnished and installed on all legs of new water main intersections.

All new water meters shall be a minimum of 3/4-inch and shall be furnished and installed by the City of Cle Elum. If more than 10 meters are required, they shall be furnished and installed by the Developer to City of Cle Elum standards.

Only one meter shall be served from each main tap.

Minimum two-inch air and vacuum release valves shall be furnished and installed at high points in the system.

Fire hydrants shall be spaced no greater than every 300 feet. Additional hydrants may be required to protect structures as determined by the City Fire Chief. Additional fire hydrants required on a site may require a looped, on-site fire hydrant main. Easements will be provided for all on-site, public, looped water mains.

All irrigation services shall be installed with a State approved, double check valve assembly. Water and sewer mains shall be separated in accordance with Section C1-9.1 of the latest edition of the Criteria for Sewage Works Design by the Washington State Department of Ecology.

The design of water mains and appurtenances is subject to review and approval by the City of Cle Elum Director of Public Works. The Director of Public Works may, at his discretion, adjust these Standards as necessary to facilitate installation of water lines and appurtenances for the health, safety, and protection of the general public.

All double detector check valve assemblies shall conform to City of Cle Elum standards. Initial and annual testing will be required.

SPECIAL PROVISIONS FOR WATER MAINS

The following sections of the Standard Specifications have been amended or supplemented as described below.

7-09 PIPE AND FITTINGS FOR WATER MAINS

7-09.2 Materials

Section 7-09.2 of the Standard Specifications shall be revised as follows:

Pipe shall be either:

Ductile Iron, conforming to the requirements of Section 9-30.1(1) of the Standard Specifications, except that it shall be Standard Thickness Class 50. Joints shall be rubber gasket, push-on type (Tyton Joint). Fittings shall be mechanical joint or flanged, as shown on the Plans, and shall conform to Section 9-30.2(1) of the Standard Specifications.

Polyvinyl Chloride (PVC) Water Main Pipes: PVC pipe (4-inch and larger) shall conform with the requirements of SECTION 9-30.1(5) of the Standard Specifications. PVC Pipe (over 12-inch) shall conform with the requirements of AWWA C 905 DR 25. Joints shall be rubber gasket push-on type with thickened bell. Fittings shall be mechanical joint and/or flanged in accordance with the Plans and SECTION 9-30.2(1) of the Standard Specifications.

Connection Couplings: Couplings for DI pipe, either transition or straight couplings, shall be compression type flexible couplings conforming to SECTION 9-30.2(7) of the Standard Specifications.

7-10 TRENCH EXCAVATION, BEDDING, AND BACKFILL FOR WATER MAINS

7-10.1(1)C Bedding

Add the following:

Imported pipe bedding for rigid pipe shall be crushed gravel, placed and compacted in layers per the Standard Specifications. Use imported pipe bedding as directed by the Engineer. Native material may be used for bedding rigid pipe if it meets the requirements of Section 9-03.15.

Imported pipe bedding for flexible pipe shall be crushed gravel, placed and compacted per the Standard Specifications. Bedding shall be placed under all flexible pipe.

7-10.2 Materials

Delete entire Section and replace with the following:

Imported Pipe Bedding shall conform to the requirements of Section 9-03.9(3), Crushed Surfacing Base Course.

Imported Select Backfill shall conform to the requirements of Section 9-03.9(3), Crushed Surfacing Top Course.

7-10.3(10) Backfilling Trenches

Add the following:

Street crossing trenches shall be backfilled for the full depth of the trench with imported Select Backfill. The Director of Public Works may require the use of Controlled Density Fill (CDF) for trench backfill in certain circumstances. The requirements for CDF are set forth in Section 8-30 of these Special Provisions.

7-10.3(12) LOCATING WIRE

A continuous solid copper locating wire shall be placed along the top of all water pipe. This wire shall be secured to the top of the pipe at maximum 10-foot intervals using 6-inch strips of 2-inch wide duct tape. All splices shall be tied, electrically continuous, and made waterproof. Access to terminal ends of the locating wire shall be made at all valve boxes, meter boxes, fire hydrants, vaults, etc. The result of this installation shall be a continuous wire circuit electrically isolated from ground. The Contractor shall be responsible for testing continuity and for testing isolation from ground in the wire after all work has been completed on the test section. The Contractor is advised to do intermediate testing on his own after backfilling operations and prior to surface restoration work to be sure continuity is maintained. If there is a break or defect in the wire, it shall be the

Contractor's responsibility to locate and repair the defect. The continuity of the location wire shall be tested from one test load point to the next by use of a temporary wire laid between test points in-line with an ohmmeter. Resistance shall be measured with an approved ohmmeter that has been properly calibrated. The continuity of a test section will be accepted if the resistance of the test section does not exceed 5 ohms per 500 feet of location wire being tested. Isolation from ground shall be measured with a megohmmeter and shall be a minimum of 20 megohms for any section of location wire tested. The Engineer shall witness the acceptance test. The wire and installation shall be included in the water main bid price. No separate payment shall be made.

7-12 VALVES FOR WATER MAINS

7-12.2 Materials

Add the following:

Gate Valves: All valves size 4-inch through 8-inch shall be resilient seated gate valves conforming to the latest AWWA Standard C 509. Valves shall be Mueller, Dresser, Clow, or equal.

All gate valves 4-inch and larger shall have mechanical joint and/or flanged connections as shown on the Plans, non-rising stems, open counterclockwise, and shall be provided with a 2-inch square operating nut. Stuffing box shall be O-ring type.

Valves smaller than 4-inch shall have screw type end connections and be non-rising stem, screwed bonnet, solid wedge disc type having a minimum working pressure of 200 psi. Valves shall be Crane 438, Stockham 103, or equal.

Butterfly Valves: All valves sizes 10-inch and larger shall be butterfly valves suitable for direct burial and shall conform to the latest AWWA Standard C 504.

Valves shall have mechanical joint and/or flanged connections as shown on the Plans and shall be of the same size as the line on which they are located. Valve shafts shall be a one-piece unit extending full size through the valve disc and valve bearings, with minimum shaft diameter as specified in AWWA C 504 Class 150B. Valve operators shall be worm gear type, sealed, gasketed, and lubricated for underground service. All valves shall open counter-clockwise and shall be provided with a 2-inch operating nut, unless otherwise specified.

Valve Boxes shall be two piece adjustable. The top section shall be similar to Rich Model 940-B, or equal, 18-inches high. The bottom section shall be a Rich Model R-36, or equal, 36-inches high. Extension sections shall be Rich Model 044, or equal, 12-inches high.

7-14 FIRE HYDRANTS

7-14.2 Materials

Replace the entire Section with the following:

The City of Cle Elum accepts hydrants of the following manufacturer, providing the hydrants conform to the City's technical specifications for fire hydrants:

Mueller Centurion, Model No. A 423

All hydrants shall have a Main Valve Opening (MVO) of 5-1/4" and one port with a 4" Cle Elum specification steamer port and two (2) 2-½" NST hose connections.

Hydrants shall be painted with two coats of high visibility yellow paint.

7-14.3(1) Setting Hydrants

Add the following:

The hydrant shall be set to the correct elevation on a concrete block base measuring 12" x 12" x 6" thick, which has been placed on undisturbed earth. Around the base of the hydrant the Contractor shall place 0.25 cubic yards of drain rock ranging in size from 3/4" to 1½" to allow free drainage of the hydrant.

7-14.3(2) Hydrant Connections

Add the following:

Hydrants shall be connected to the main with 6-inch minimum diameter water main. Each hydrant lateral shall include an auxiliary gate valve and valve box.

7-14.3(2)A Hydrant Restraint

Add the following:

The Contractor shall securely shackle the hydrant to the water main as indicated on the Standard Detail.

7-15 SERVICE CONNECTIONS

7-15.1 General

This work shall consist of installing new water services and connecting to the water main. New water service shall be installed in accordance with the detail on the Plans and shall consist of a new service saddle, new corporation stop, new service line, new compression couplings as required, new meter box, new meter setter, and new service meter.

The Contractor shall set the meter box to the finished grade of the area. The Contractor will be required to reset the meter box if it is not at finished grade at the completion of the project. The completed water service shall be tested at system operating pressure by the Contractor and must show no signs of leakage.

7-15.2 Materials

Section 7-15.2 of the Standard Specifications shall be revised as follows:

Service Saddle: Service saddles shall be Romac Industries Style 101N Nylon Saddle with Stainless Steel Strap, or approved equal.

Corp Stop: Corporation stops shall be Mueller Co. Mark II Oriseal, or approved equal.

Service Pipe: Service pipe for use on this project shall be copper tubing Type K in accordance with Section 9-30.6(3)A of the Standard Specifications.

Meter: Meters will be furnished by the City of Cle Elum (Sensus "Touch Read").

5/8" x 3/4" Meter Installations: Meter boxes shall be Mueller/McCullough Thermal-Coil meter boxes, and shall be equipped as follows:

Box Style	-	Single meter
Box Diameter	-	15-inch diameter
Box Depth	-	48-inch depth
Meter Inlet Type	-	Locking angle meter stop
Meter Outlet Type	-	Dual check valve
Box Bottom Type	-	Less bottom. No bottom required.
Box Locking Device	-	Side locking
Insulating Pat	-	4-inch thick
Lid	-	15-inch diameter flat lid with side mounted key lock and ready for "touch read" meter register feature
Lid Frame	-	Lid frames (part number 700097) are to be furnished and installed by the Contractor in all installations in asphalt concrete, cement concrete, driveways, and/or concrete pavers.

1" Meter Installations: Meter boxes shall be Mueller/McCullough Thermal-Coil meter boxes, and shall be equipped as follows:

Box Style	-	Single meter
Box Diameter	-	18-inch diameter
Box Depth	-	48-inch depth
Meter Inlet Type	-	Locking angle meter stop
Meter Outlet Type	-	Dual check valve
Box Bottom Type	-	Less bottom. No bottom required.
Box Locking Device	-	Side locking
Insulating Pat	-	4-inch thick
Lid	-	18-inch diameter flat lid with side mounted key lock and ready for "touch read" meter register feature
Lid Frame	-	Lid frames (part number 700098) are to be furnished and installed by the Contractor in all installations in asphalt concrete, cement concrete, driveways, and/or concrete pavers.

1-1/2-Inch and 2" Meter Installations: Meter vaults shall be Mueller/McCullough EZ-Vault meter setters, or approved equal, and shall be equipped as follows:

EZ-Vault	-	1-1/2", code number 500
	-	2", code number 550
Box Style	-	Single Meter
Box Diameter	-	1-1/2" - 24-inch diameter
	-	2" - 27-inch diameter
Box Depth	-	48-inch depth
Meter Inlet Type	-	Flanged locking angle meter stop
Meter Outlet Type	-	Flanged dual check Valve
Box Bottom Type	-	Less bottom. No bottom required
Box Locking Device	-	Side locking
Insulating Pad	-	4-inch thick
Lid	-	18-inch diameter flat lid with side mounted key lock and ready for "touch read" meter register feature
Lid Frame	-	Lid frames (part number 700098) are to be furnished and installed on all 1-1/2" and 2" meter installations.

7-15.3 Construction Requirements

Section 7-15.3 of the Standard Specifications shall be modified as follows:

Where directed by the Engineer, i.e., street crossing, trenches shall be backfilled for the full depth of the trench with imported select backfill.

The City will inspect service installation work. The City inspector will inspect the water service pipe after the pipe has been laid in the trench, but prior to backfill. A leak test will be required to be run in the presence of the inspector. Provide 48 hours minimum notice prior to any required inspections.

Water and sewer service lines may not be laid in the same trench except as provided in Section 1008 of the Uniform Plumbing Code (UPC) and with written approval of the City of Cle Elum Building Inspector.

Water services shall be laid with a minimum of 48 inches of cover, or as directed by the Public Works Director.

CHAPTER 6 - SANITARY SEWER SYSTEM IMPROVEMENTS

GENERAL REQUIREMENTS FOR SANITARY SEWER MAINS

All extensions to the sewer system shall conform to the design standards of the City of Cle Elum and the Washington State Department of Ecology as follows:

All new lots and developments shall be served by a public sanitary sewer line adjacent to the lot or development site.

Sewer lines shall be extended by the Owner or Developer to the point where the adjoining property owner's responsibility for further extension begins. This typically requires an extension across the entire frontage of the property to the property line of the adjoining owner. In some cases, it will require dedication of an easement and a line extension across the property or extension across two or more side of the developing property. Extensions will be consistent with and implement the City's adopted Sewer Comprehensive Plan.

Sewer lines shall be located in streets to serve abutting properties. When necessary, sewer lines may be located within public easements. Lines located in streets will be offset from the street centerline and not located within a vehicle wheel path. Sewer lines located in easements shall generally be located in the center of the easement, but may, with the approval of the Director of Public Works, be offset to accommodate the installation of other utilities or to satisfy special circumstances.

The minimum size for public sewer mains is eight (8) inches in diameter. The developer's sewer system must provide capacity for the proposed development, but must also provide capacity for future extensions.

Sewer lines shall be terminated with a manhole. In special circumstances, a flush-end (clean-out) may be installed on the end of a sewer main extension, provided the end is no further than 150 feet from the last manhole and the sewer main line and grade will permit further extension.

Manholes shall be installed at intervals of no greater than 400 feet and at all vertical and horizontal angle points in the sewer main.

Each building containing sanitary sewer facilities shall be served by a separate private side sewer line. Branched side sewers serving multiple buildings and properties shall not be permitted. Side sewers serving multi-unit buildings are permitted.

Side sewers shall be installed in accordance with the Uniform Plumbing Code (UPC) and subject to review and approval by the City of Cle Elum Building Inspector. Water and sewer lines shall not be laid in the same trench, except as provided in Section 1008 of the UPC and with written approval of the City of Cle Elum Building Inspector.

Sewer lines shall be designed for gravity flow operation. Lift stations and force mains shall be limited to those locations and circumstances where they are consistent with the Comprehensive Sewer Plan and are the only viable solution to serve the proposed

development and other properties in the vicinity. Lift stations and force mains shall be designed by a Professional Engineer licensed in the State of Washington.

The design of sewer mains and appurtenances is subject to review and approval by the City of Cle Elum Director of Public Works. The Director of Public Works may, at his discretion, adjust these Standards as necessary to facilitate installation of sewer lines and appurtenances for the health, safety, and protection of the general public.

SPECIAL PROVISIONS FOR SANITARY SEWER MAINS

The following sections of the Standard Specifications have been amended or supplemented as described below.

7-05 MANHOLES, INLETS, CATCH BASINS, AND DRYWELLS

7-05.2 Materials

Add the following:

Manholes shall be gasketed and constructed of minimum 48-inch diameter reinforced precast concrete manholes sections in conformance with the requirements of this Section. The base and first barrel section shall be precast monolithically with preformed channels.

Joints in the manhole sections shall be watertight and shall be a rubber ring compression joint complying with ASTM C443, a flexible, plastic gasket, or approved equal.

Manhole frames and covers shall be cast iron with a combined weight of not less than 400 pounds and have a clear opening of 24 inches. The frames and covers shall be the manufacturer's stock pattern capable of withstanding, with appropriate margin of safety, an H20 loading. Covers shall have a 1-inch hole only, unless otherwise noted, and the top shall be flat with a non-skid pattern. The contact surfaces of the frames and covers shall be machine finished to a common plane or have other adequate provision to prevent rocking.

7-05.3 Construction Requirements

Add the following

The design and construction of all manholes shall provide for a minimum 0.10 foot vertical drop through the manhole

Manhole coupling adaptors may be precast in the manhole to accept PVC pipe, provided diameters match. No field grouting of pipe into manholes will be allowed. Pipe connections at manholes must be gasketed and must be flexible. "A-Lok" gasket system or approved equal may be used as an alternate to the manhole coupling adapter.

7-08 GENERAL PIPE INSTALLATION REQUIREMENTS

7-08.1 General

Add the following:

All construction work shall be inspected by the City of Cle Elum prior to backfilling. At least 48 hours notice shall be given to the City Public Works Department prior to backfilling.

The Contractor shall notify the Utility Notification Center (One Call Center) at least 48 hours prior to start of excavation so that underground utilities may be marked. Telephone number is 1-800-553-4344.

7-08.3(1)C Bedding the Pipe

Add the following:

The imported pipe bedding to be utilized for the trench backfill shall be crushed gravel, placed and compacted in layers as designated by the Director of Public Works. Crushed gravel shall conform to Section 9-03.9(3) Crushed Surfacing Top Course.

7-08.3(2)B Pipe Laying - General

Add the following:

All sewer pipe shall be provided with 6-inch wide magnetic marking tape as detailed in Standard Detail S-1.

7-08.3(3) Backfilling

Add the following:

Street crossing trenches shall be backfilled for the full depth of the trench with imported crushed gravel select backfill conforming to Section 9-03.9(3) Crushed Surfacing Base Course. The Director of Public Works may require the use of Controlled Density Fill (CDF) for trench backfill in certain circumstances. The requirements for CDF are set forth in Section 8-30 of these Special Provisions.

Water settling and/or mechanical compaction shall be required for all trenches. The density of the compacted materials shall be at least 95% of the maximum density as determined by ASTM D 698 Test (Standard Proctor).

7-17 SANITARY SEWERS

7-17.2 Materials

Sanitary Sewer Pipe approved for the City of Cle Elum shall be:

PVC Sewer Pipe (Gravity): Polyvinyl Chloride Pipe with flexible gasketed joints shall conform with the requirements of Section 9-05.12 of the Standard Specifications (ASTM D3034, SDR 35). Pipe joint type for restrained gasket.

PVC fittings for PVC sewer pipe such as tees, wyes, elbows, plugs, caps, etc, shall be flexible gasket joint fittings acceptable for use and connection to PVC sewer pipe.

7-18 SIDE SEWERS

7-18.1 General

Add the following:

Side sewers shall be constructed with a minimum of 30 inches of cover. This provision may be waived by the Director of Public Works under special circumstances; however, under no circumstances shall the side sewer be laid with less than 18 inches of cover.

7-18.2 Materials

Add the following:

Side sewers shall be a minimum of 4-inches in diameter. Larger sizes, if required, will be approved by the Director of Public Works on a case by case basis.

CHAPTER 7 - STREET IMPROVEMENTS

GENERAL REQUIREMENTS FOR STREETS

All new street construction must conform to these design standards of the City of Cle Elum and the Cle Elum Municipal Code.

The maximum length of a cul-de-sac street shall be 600 feet measured along the street centerline from the nearest street intersection to the center of the cul-de-sac.

Cement concrete barrier curb shall be installed along all new streets. Rolled curb may be permitted along certain residential streets as determined by the City Public Works Director. If rolled curb is allowed, barrier curb must be installed around all new radii. New sidewalks behind rolled curb shall be a minimum of 6 inches thick.

Sidewalks shall be constructed on both sides of all new streets. If the Developer believes there are special circumstances whereby the construction of sidewalk on one side should be deferred, he may make written request to the City Public Works Director.

New street lighting shall be designed to provide required levels of lighting based upon street classification and location as determined by the City of Cle Elum. At a minimum, a street light shall be installed at each street intersection, at mid block, no more than three hundred (300) feet apart, and at ends of cul-de-sacs. Street lights shall meet the design and placement requirements of these Standards and the City Public Works Director. All electrical panels will be designed to City of Cle Elum standards.

Traffic Studies

In order to provide sufficient information to assess a development's impact on the transportation system and level of service, the Director of Public Works may require a traffic study to be completed by the Developer at the Developer's expense. This decision will be based upon the size of the proposed development, existing roadway condition, traffic volumes, accident history, expressed community concern, and other factors relating to transportation.

Traffic studies shall be conducted under the direction of a traffic engineer or civil engineer licensed in the State of Washington and possessing special training and experience in traffic engineering.

The level of detail and scope of the traffic study may vary with the size, complexity, and location of the proposed development. A traffic study shall, at a minimum, be a thorough review of the immediate and long-range effects of the proposed development on the City's transportation system. Guidelines for the traffic study shall be reviewed by the Director of Public Works on a project basis.

SPECIAL PROVISIONS FOR STREETS

The following sections of the Standard Specifications have been amended or supplemented as described below.

8-30 CONTROLLED DENSITY FILL (NEW SECTION)

The following new section shall be added to the Standard Specifications:

8-30.1 General

Controlled Density Fill (CDF) may be required for street crossings by the Public Works Director. It shall be a mixture of Portland Cement, fly ash, aggregate, water, and admixtures proportioned to provide a non-segregating, self-consolidating, free-flowing material which will result in a hardened, dense, non-settling fill.

8-30.2 Materials

Materials shall meet the requirements of the following Sections of the Standard Specifications:

Portland Cement (9-01)	Type II
Fly Ash	Class F or C
Aggregates	9-03.1
Water	9-25
Admixtures	9-23.6

8-30.3 Construction Requirements

8-30.3(1) Construction Materials

The CDF shall be a mixture of Portland Cement, fly ash, aggregate, water, and admixtures which has been batched and mixed in accordance with Section 6-02.3 of the Standard Specifications.

The following table provides a guideline for proportioning the Controlled Density Fill for this project. The final mix provided by the Contractor shall result in a material which is excavatable by machine with a maximum unconfined compressive strength of 300 psi.

Water	50 gals per cubic yard
Cement	50 lbs per cubic yard
Fly Ash	250 lbs per cubic yard
Aggregate	3,200 lbs per cubic yard

The above table provides a guideline for the CDF mixture. The weights shown are only an estimate of the amount to be used per cubic yard of CDF. Actual amounts may vary from those shown as approved by the Engineer or approved mix data from similar projects which provided proper strength, workability, consistency, and density.

8-30.3(7) Placing Controlled Density Fill

The floatable CDF shall be placed in the trench area where directed by the Engineer and brought up uniformly to the elevation directed. In the cases where existing concrete slabs have been undermined by excavation, the Contractor shall ensure that the CDF is flowed completely under the slab.

Mixing and placing may be started if weather conditions are favorable, when the temperature is at least 34° F and rising. At the time of placement, CDF must have a temperature of at least 40° F.

Mixing and placing shall stop when the temperature is 38° F and falling. Each filling stage shall be as continuous an operation as practicable. CDF shall not be placed on frozen ground.

The trench section to be filled with CDF shall be contained at either end of trench section by bulkhead or earth fill.

CHAPTER 8 - STORM DRAINAGE

GENERAL REQUIREMENTS FOR STORM DRAINAGE IMPROVEMENTS

All City of Cle Elum storm sewer improvements shall conform to the following design standards of the City:

Storm runoff occurring on all new lots and developments (private property) shall be retained and disposed of on-site. No storm runoff will be allowed to enter public property or public storm drainage system.

Storm runoff for new public streets shall be designed and constructed as required to the point where the adjoining property owner's responsibility for further extension begins. This typically requires an extension across the entire frontage of the property to the property line of the adjoining owner.

All storm sewer designs for new public streets shall be based upon an engineering analysis which takes into account total drainage areas, runoff rates, pipe and inlet capacities, and any other factors pertinent to the design

All new storm drainage facilities, public or private, shall be designed by a Professional Engineer licensed in the State of Washington. Complete storm water runoff and drainage facilities sizing calculations shall be submitted to the City of Cle Elum for review and comment.

Storm sewer facilities and pipelines shall be designed to meet a minimum 10-year storm criteria. Small private developments may be designed to accommodate 1-inch of precipitation over the on-site impervious surfaces. Small developments are defined to be 20,000 SF or less of impervious surface area. Impervious surfaces must be clearly noted and shown on the project site plan.

All storm water facilities shall have oil and silt separation.

Inlet spacing shall be designed in accordance with the WSDOT Hydraulics Manual, Chapter 5. Generally, inlet spacing shall not exceed 300 feet. There shall be installed a manhole or Type II catch basin at the intersection of two collector storm sewers. A collector storm sewer is a sewer servicing more than one catch basin.

SPECIAL PROVISIONS FOR STORM SEWERS

The following Sections of the Standard Specifications have been amended or supplemented as described below:

7-02 CULVERTS

7-02.4 Materials

Add the following:

Culvert pipe approved for use on this project shall be as follows:

Corrugated Aluminum Alloy Culvert Pipe meeting the requirements of SECTION 9-05.5 of the Standard Specifications.

OR

Aluminized Corrugated Steel Culvert Pipe meeting the requirements of SECTION 9-05.4 of the Standard Specifications.

7-04 STORM SEWERS

7-04.2 Materials

Add the following:

The storm drain pipe approved for use on this project shall be as follows:

36-INCH AND LARGER PIPE

Corrugated Aluminum Alloy Storm Sewer Pipe: All corrugated aluminum alloy storm sewer pipe shall comply with the requirements specified in SECTION 9-05.11 of the Standard Specifications and shall be 16 gauge with helical corrugations. A protective coating shall not be required.

15-INCH THROUGH 36-INCH PIPE

Corrugated Aluminum Alloy Storm Sewer Pipe: All corrugated aluminum alloy storm sewer pipe shall comply with the requirements specified in SECTION 9-05.11 of the Standard Specifications and shall be 16 gauge with helical corrugations. A protective coating shall not be required. All corrugated metal pipe joints shall be flexible using rubber gasket joints. Gaskets shall be made of 3/8-inch thick by 12-inch minimum width closed cell synthetic sponge rubber, per ASTM D 1056, Grade SCE-43, fabricated in the form of a cylinder with a diameter of approximately 10 percent less than the nominal pipe size. The gasket shall be centered under the band and lapped an equal distance on the ends of the adjoining pipe sections. Coupling bands shall be used and shall conform to the provisions of SECTION 9-05.11(1) of the Standard Specifications. Coupling bands shall be made by the same manufacturer as the pipe and shall be made of the same base material as the pipe which it connects.

PE Pipe: Corrugated High Density Polyethylene (CPEP) pipe, couplings, and fittings shall comply with the requirements of SECTION 9-05.20 of the Standard Specifications.

12-INCH AND SMALLER PIPE

PVC Pipe: Polyvinyl chloride (PVC) pipe shall conform with requirements specified in SECTION 9-05.12 of the Standard Specifications (ASTM D 3034, SDR 35). The pipe joint type shall be restrained gasket.

OR

PE Pipe: Corrugated High Density Polyethylene (CPEP) pipe, couplings, and fittings shall comply with all the requirements of AASHTO M-252-85I. Joints shall be water-tight.

Pipe shall be as manufactured by Hancor, Advanced Drainage Systems, Inc., or approved equal.

The perforated storm drain pipe approved for use shall be as follows:

PE Pipe: Corrugated High Density Polyethylene (CPEP) pipe, couplings, and fittings shall comply with all the requirements of SECTIONS 9-05.1(6) or 9-05.1(7) of the Standard Specifications.

DRAIN ROCK: Drain rock for use as backfill for the perforated storm drain pipe shall be coarse aggregate conforming to the requirements for gravel backfill for drywells as specified in SECTION 9-03.12(5) of the Standard Specifications.

7-04.3(1) Cleaning and Testing

7-04.3(1)A General

No infiltration or exfiltration test will be required for the storm drain pipe.

7-05 MANHOLES, INLETS, CATCH BASINS, AND DRYWELLS

7-05.2 Materials

Section 7-05.2 of the Standard Specifications shall be revised as follows:

Gravel Backfill for Drywells: Gravel backfill for drywells shall be as specified in Section 9-03.12(5) of the Standard Specifications.

Manhole Metal Castings: All cast iron frames and covers shall be as specified in SECTION 9-05.15(1) of the Standard Specifications. All cast iron frames and covers to be used on this project shall be of the type, weight, and size approved by the City of Cle Elum, and shall be furnished by the Contractor. Covers for sanitary sewer shall be stamped "SEWER." Covers for storm drain shall be stamped "STORM."

Precast Concrete Catch Basin: Catch basins shall be constructed as shown on the detail sheet of the Plans.

Catch basins shall be constructed of thirty (30) inch I.D. Washington State standard reinforced concrete culvert pipe using cast iron grating and frames as shown on the Plans.

Catch Basin Metal Castings: All frames and grates shall be capable of withstanding, with a reasonable margin of safety, a concentrated load of 20,000 pounds and shall be as specified in SECTION 9-05.15(2) of the Standard Specifications. The grate shall be ductile iron and "bicycle safe." The contact surfaces of the frame and grate shall be machine finished to a common plane and shall be so cast as to prevent rocking. Frames and grates shall be Inland Foundry Co., Inc., No. 433 Round Base, 20" x 24" or approved equal.

7-05.3(1) Adjusting Manholes and Catch Basins to Grade

Delete and replace with the following:

Manholes and similar structures shall not be adjusted until the pavement is completed, **at which time the center of each structure shall be relocated from references previously established by the Contractor.**

The asphalt concrete pavement shall be cut and removed to a neat circle, the diameter of which shall be equal to the outside diameter of frame plus 2 feet. The frame shall be placed on cement concrete blocks or adjustment rings and wedged up to the desired grade. The base materials shall be removed and Class 3000 cement concrete shall be placed within the entire volume of the excavation up to, but not to exceed, 1½ inches below the finished pavement surface.

On the following day, the concrete, the edges of the asphalt concrete pavement, and the outer edge of the casting shall be painted with hot asphalt cement. Class G asphalt concrete shall then be placed and compacted with hand tampers and a patching roller.

The completed patch shall match the existing paved surface for texture, density, and uniformity of grade. The joint between the patch and the existing pavement shall then be painted with hot asphalt cement or asphalt emulsion and shall be immediately covered with dry paving sand before the asphalt cement solidifies.

7-05.3(2) Abandon Existing Manholes

Replace the entire section with the following:

Where shown on the Plans, existing sanitary sewer manholes shall be abandoned in place after the new sanitary sewer collection system is in place and all side sewers have been transferred to the new sanitary sewer pipeline. The following new section shall be added to the Standard Specifications:

> At least the top 3 feet of each manhole, or the top conical section in precast concrete manholes, shall be removed, including the cast iron ring and cover and concrete pad, if any. Debris resulting from breaking of the upper portion of the manhole may be mixed with backfill subject to the approval of the Engineer. Ring and cover will become property of the Contractor and all other surplus material shall be disposed of.

The existing pipe openings shall be plugged watertight with Class 3000 concrete and the manhole bottom slabs shall be broken to promote drainage. The remaining manhole structure shall be backfilled with granular material conforming to SECTION 9-03.9(3) CRUSHED SURFACING BASE COURSE. Place backfill in uniform layers and compact to 95% maximum dry density, as determined by ASTM D 1557 (Modified Proctor).

Excavations resulting from manhole abandonment shall be backfilled with suitable, job-excavated material to top of subgrade. Compact to 95% maximum dry density as determined by ASTM D 698 (Standard Proctor). Restore surface to the condition existing prior to excavation with native material, gravel surfacing, or asphalt concrete pavement as shown for trench repair on the plans.

APPENDIX A

TRANSFER OF OWNERSHIP OF UTILITY SYSTEM
(Individual)

_____, owner(s), do(es) hereby transfer(s), deliver(s) and relinquish(es) to the City of Cle Elum, Washington, all right, title and interest in, and ownership of, the following described utility system:

The undersigned owner(s) agree (s) and understand(s) that this transfer of ownership of the above described Public Facilities to the City of Cle Elum is subject to the conditions of the 2nd paragraph of **Section 1-05.12 Final Acceptance (APWA Only)** of the latest edition of the Standard Specifications for Road, Bridge, and Municipal Construction, Washington State Department of Transportation modified as follows:

> "Final acceptance shall not constitute acceptance of any unauthorized or defective work or material. The City shall not be barred from requiring the Contractor to remove, replace, repair, or dispose of any unauthorized or defective work or material or from recovering damages for any such work or material."

This Transfer of Ownership of Utility System shall be effective only upon the City's final approval and acceptance of the utility system.

_____

_____

STATE OF WASHINGTON
Kittitas County

I certify that I know of have satisfactory evidence that _____ and _____ (is/are) the person(s) who personally appeared before me and that said person(s) acknowledged that (he/she/they) signed this instrument, and acknowledged it to be (his/her/their) free and voluntary act and for the uses and purposes mentioned in the instrument.

Dated: _____

Given under my hand and official seal the day and year last written.

_____
Notary Public in and for the State of Washington

residing at _____

My Commission expires _____

TRANSFER OF OWNERSHIP OF UTILITY SYSTEM
(Corporate)

_____, owner(s), do(es) hereby transfer(s), deliver(s) and relinquish(es) to the City of Cle Elum, Washington, all right, title and interest in, and ownership of, the following described utility system:

The undersigned owner(s) agree (s) and understand(s) that this transfer of ownership of the above described Public Facilities to the City of Cle Elum is subject to the conditions of the 2nd paragraph of **Section 1-05.12 Final Acceptance (APWA Only)**, of the latest edition of the Standard Specifications for Road, Bridge, and Municipal Construction, Washington State Department of Transportation, modified as follows:

> "Final acceptance shall not constitute acceptance of any unauthorized or defective work or material. The City shall not be barred from requiring the Contractor to remove, replace, repair, or dispose of any unauthorized or defective work or material or from recovering damages for any such work or material."

This Transfer of Ownership of Utility System shall be effective only upon the City's final approval and acceptance of the above described Public Facilities.

_____

_____

STATE OF WASHINGTON
Kittitas County

I certify that I know or have satisfactory evidence that _____ is the person who appeared before me, and said person acknowledged that he signed this instrument, on oath stated that he was authorized to execute the instrument, and acknowledged it as the _____ of _____, to be the free voluntary act of such party for the uses and purposes mentioned in the instrument.

Dated: _____

Given under my hand and official seal the day and year last written.

_____
Notary Public in and for the State of Washington

residing at _____

My Commission Expires _____

APPENDIX B

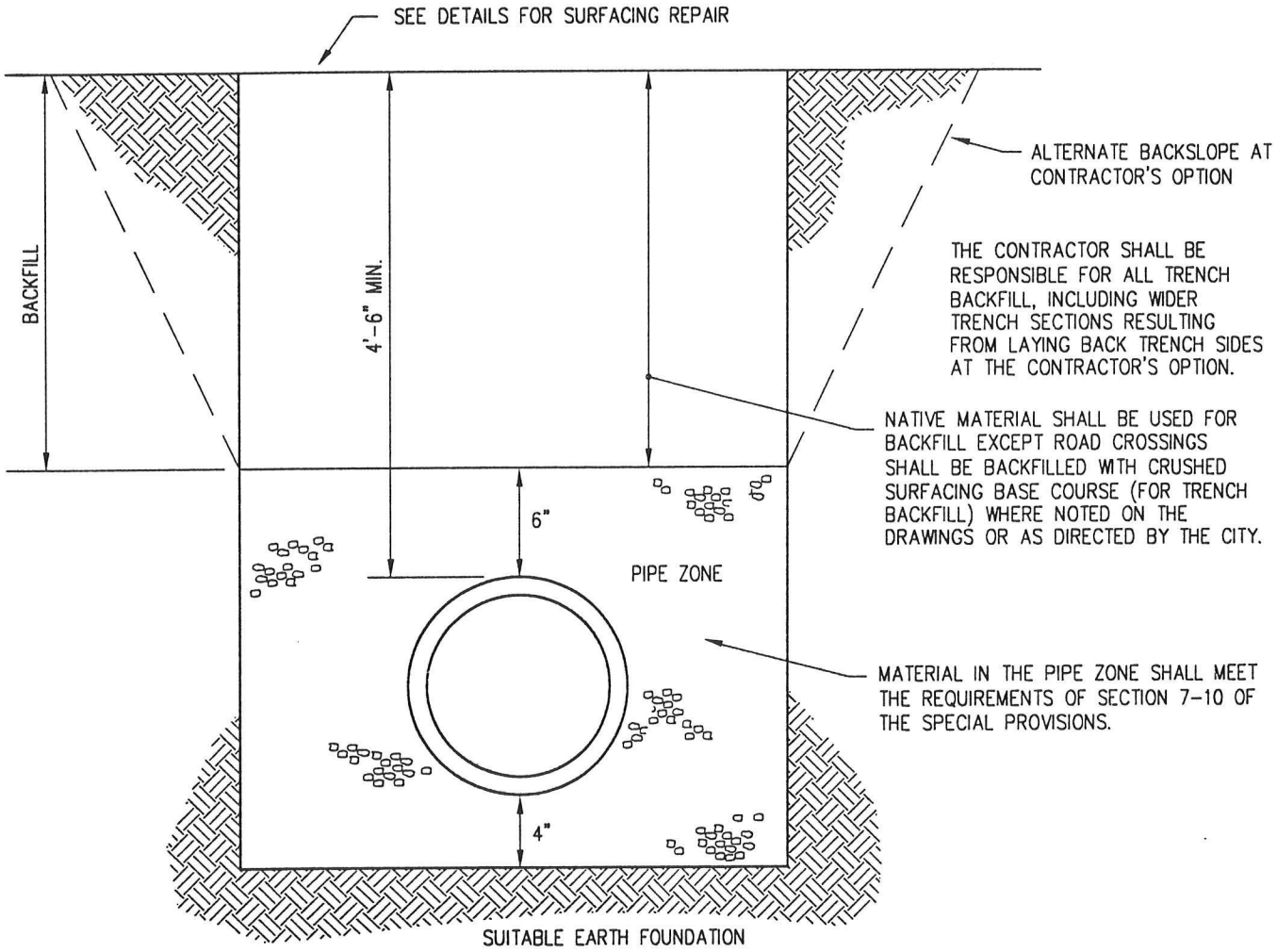

NOTE:
ONLY THE LATEST DETAIL, AS APPROVED BY THE DIRECTOR OF PUBLIC WORKS, SHALL BE USED.

Revision	Date	Description	Appr
ORIG.	1-21-02		

WATERMAIN TRENCH SECTION	CITY OF CLE ELUM-STANDARD DETAIL	W-1

NOTE: ADJUST EARS ON VALVE BOX TO ALIGN WITH PIPE.

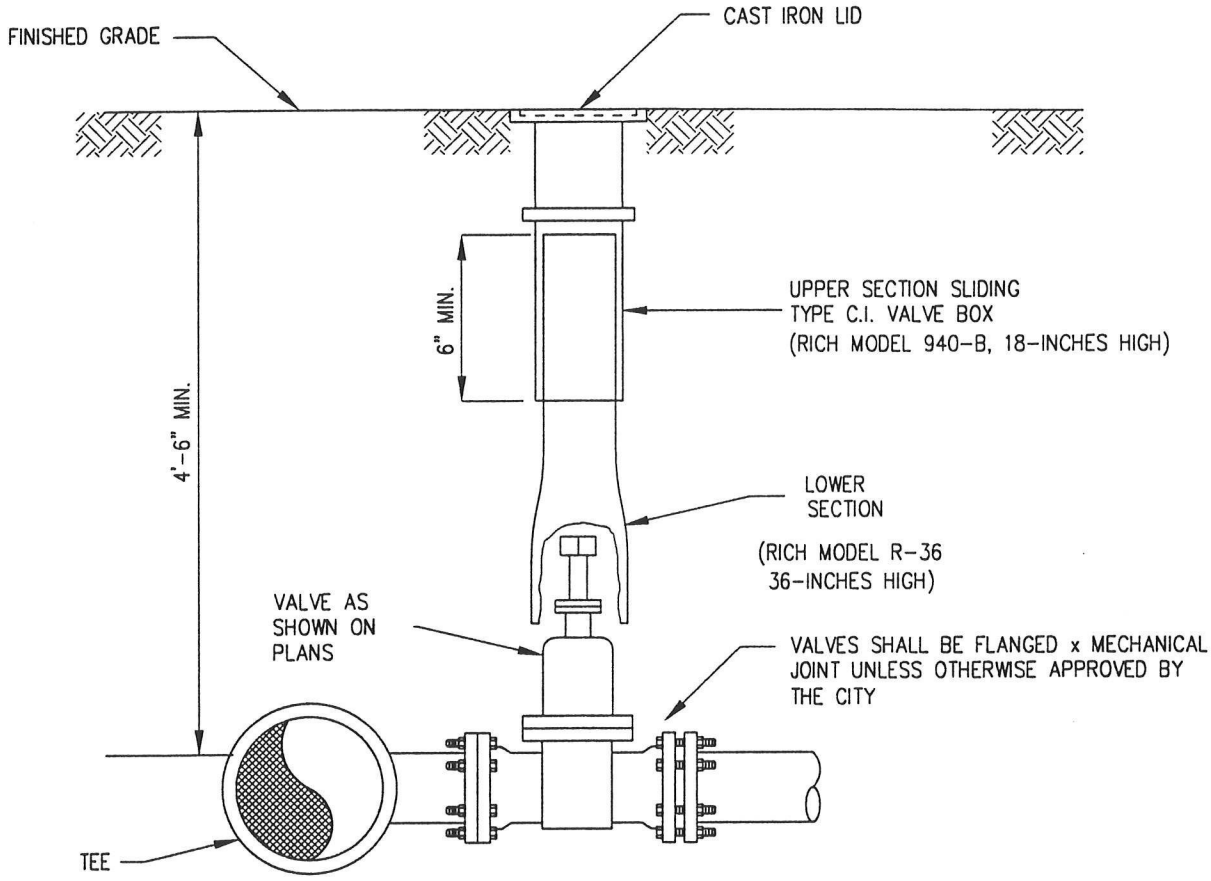

NOTE: PROVIDE EXTENSION PIECE WHERE REQUIRED FOR VALVE BOX. (RICH MODEL 044, 12-INCHES HIGH)

NOTE:
ONLY THE LATEST DETAIL, AS APPROVED BY THE DIRECTOR OF PUBLIC WORKS, SHALL BE USED.

Revision	Date	Description	Appr
ORIG.	1-21-02		

VALVE AND VALVE BOX	CITY OF CLE ELUM-STANDARD DETAIL	W-2

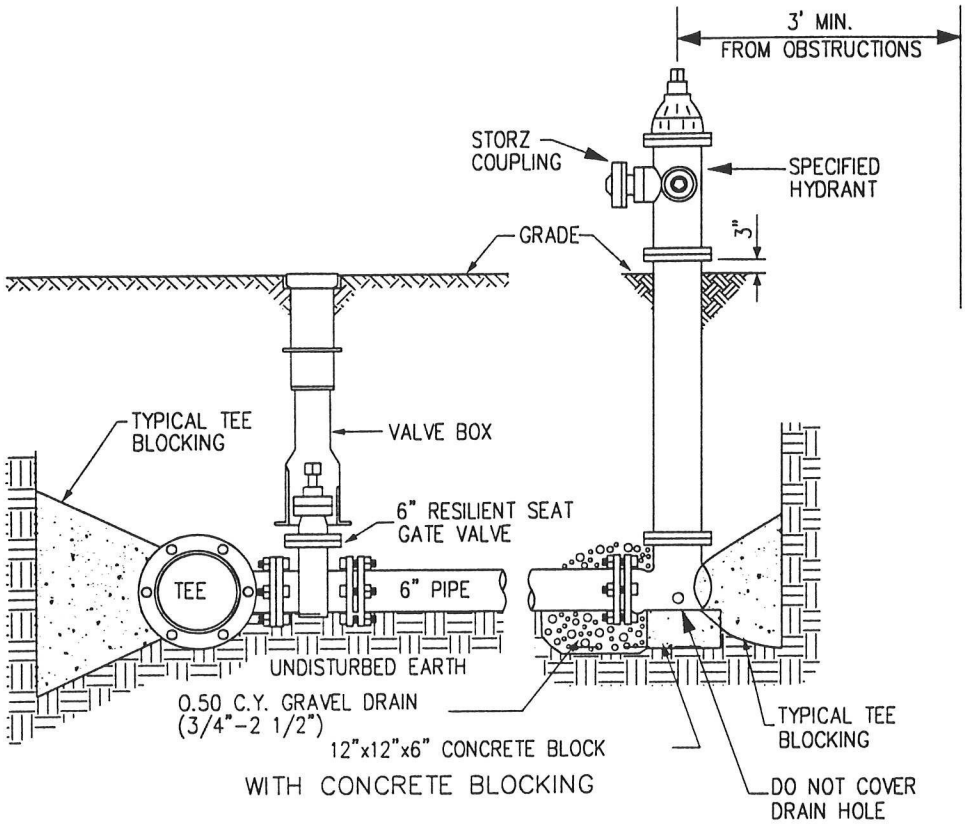

WITH CONCRETE BLOCKING

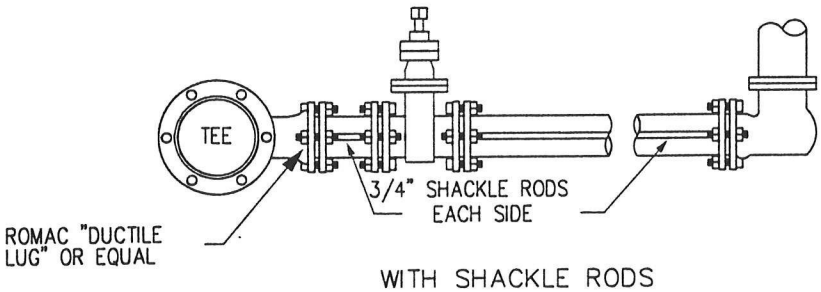

WITH SHACKLE RODS

NOTE:
1. SHACKLE RODS ARE TO BE USED ONLY WHERE POOR SOIL CONDITIONS PRECLUDE THE USE OF CONCRETE BLOCKING.
2. SHACKLE RODS ARE TO BE THREADED AT EACH END A LENGTH SUFFICIENT TO ALLOW THE USE OF DOUBLE NUTS ON EACH END TO REPLACE THE BOLTS NORMALLY USED IN MECHANICAL JOINT CONNECTIONS.
3. REMAINDER OF HYDRANT DETAIL IS TYPICAL OF BLOCKED HYDRANT.

NOTE:
ONLY THE LATEST DETAIL, AS APPROVED BY THE DIRECTOR OF PUBLIC WORKS, SHALL BE USED.

Revision	Date	Description	Appr
ORIG.	3-1-02		

FIRE HYDRANT	CITY OF CLE ELUM-STANDARD DETAIL	W-3

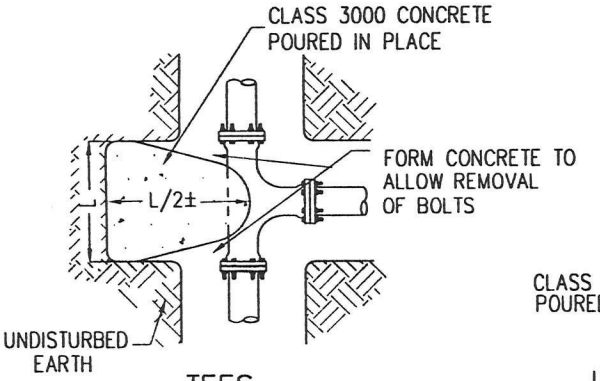

TEES

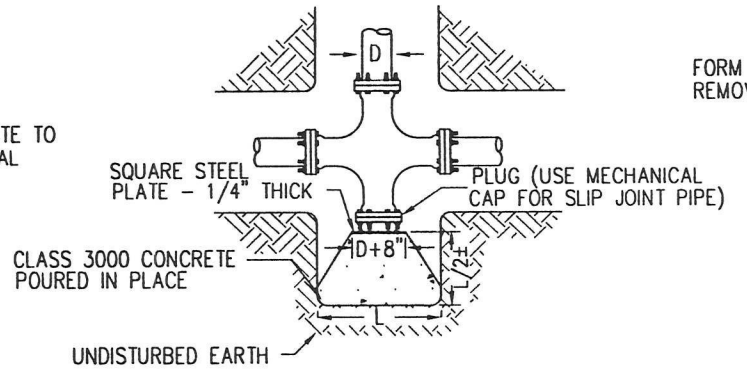

PLUGS AND CAPS

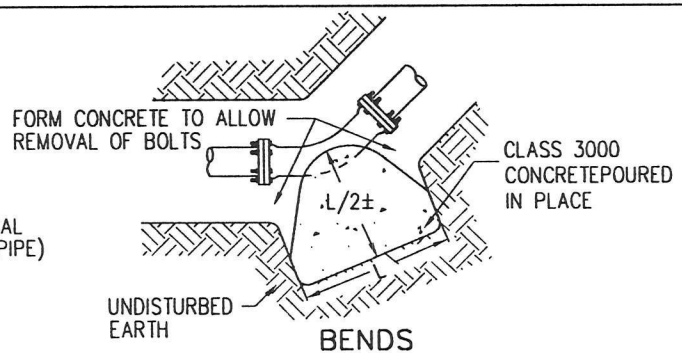

BENDS

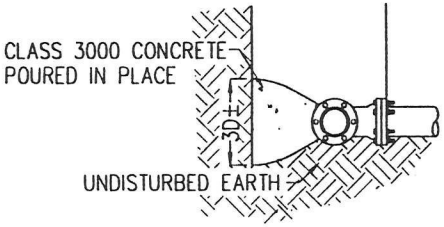

SIDE VIEW

THIS VIEW TYPICAL OF ALL BLOCKING

NOTES:

1. D IS APPROXIMATE PIPE DIAMETER. THE ABOVE END AREAS ARE BASED ON AN ALLOWABLE SOIL BEARING PRESSURE OF 1500 PSF AND 250 PSI TEST PRESSURE.
2. DIMENSIONS LISTED DENOTE MINIMUM STANDARDS FOR SOIL AND TEST PRESSURES SHOWN. SHOULD TEST PRESSURE AND/OR SOIL CONDITIONS VARY, THE CONTRACTOR SHALL CONTACT THE ENGINEER FOR SPECIAL THRUST BLOCK DESIGN.
3. ALL FITTINGS AND/OR PIPE MAKING DIRECT CONTACT WITH CONCRETE SHALL BE WRAPPED WITH 4 MIL POLYETHYLENE SHEETING PRIOR TO PLACEMENT OF CONCRETE.

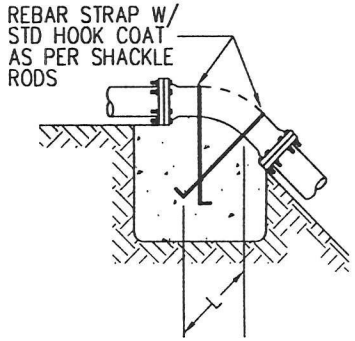

VERTICAL OVERBEND

MINIMUM END AREAS				
PIPE SIZE (D)	TEES & PLUGS	90° BENDS	45° BENDS	11 1/4° AND 22 1/2° BENDS
6"	5.1 SQ FT	7.2 SQ FT	3.9 SQ FT	2.0 SQ FT
8"	8.8 SQ FT	12.4 SQ FT	6.7 SQ FT	3.4 SQ FT
10"	14.3 SQ FT	20.2 SQ FT	11.0 SQ FT	5.6 SQ FT
12"	20.4 SQ FT	28.9 SQ FT	15.7 SQ FT	7.9 SQ FT
14"	27.7 SQ FT	39.2 SQ FT	21.2 SQ FT	10.7 SQ FT
16"	35.8 SQ FT	51.2 SQ FT	27.5 SQ FT	13.9 SQ FT

VERTICAL OVERBEND				
PIPE SIZE (D)	22 1/2° BEND	45° BEND	REBAR SIZE	L
6"	20 CU FT	39 CU FT	#5	2.0 FT
8"	34 CU FT	67 CU FT	#5	2.0 FT
10"	56 CU FT	110 CU FT	#5	2.0 FT
12"	79 CU FT	157 CU FT	#6	2.5 FT
14"	107 CU FT	212 CU FT	#7	3.0 FT
16"	139 CU FT	275 CU FT	#9	4.0 FT

NOTE:
ONLY THE LATEST DETAIL, AS APPROVED BY THE DIRECTOR OF PUBLIC WORKS, SHALL BE USED.

Revision	Date	Description	Appr
ORIG.	1-21-02		

TYPICAL THRUST BLOCKING	CITY OF CLE ELUM-STANDARD DETAIL	W-4

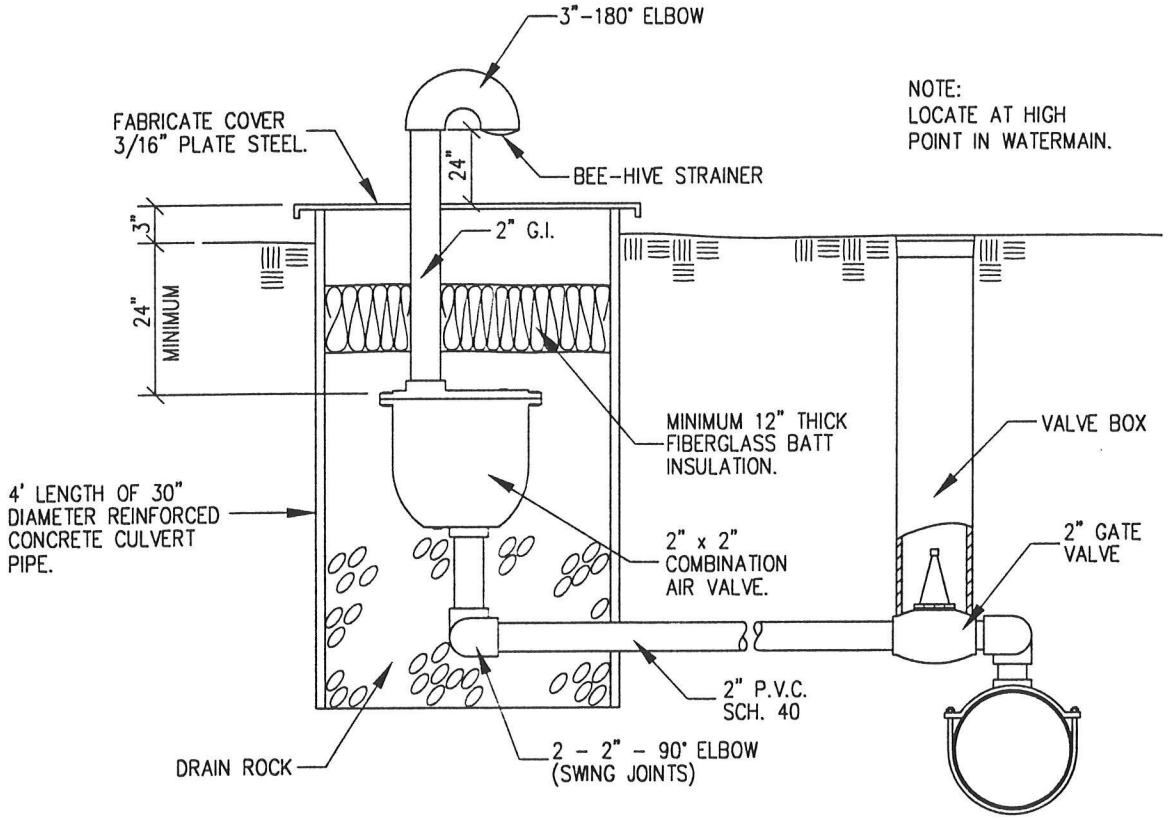

NOTE:
ONLY THE LATEST DETAIL, AS APPROVED BY
THE DIRECTOR OF PUBLIC WORKS, SHALL BE USED.

ORIG.	1-21-02		
Revision	Date	Description	Appr

AIR RELEASE VALVE DETAIL	CITY OF CLE ELUM-STANDARD DETAIL	W-5

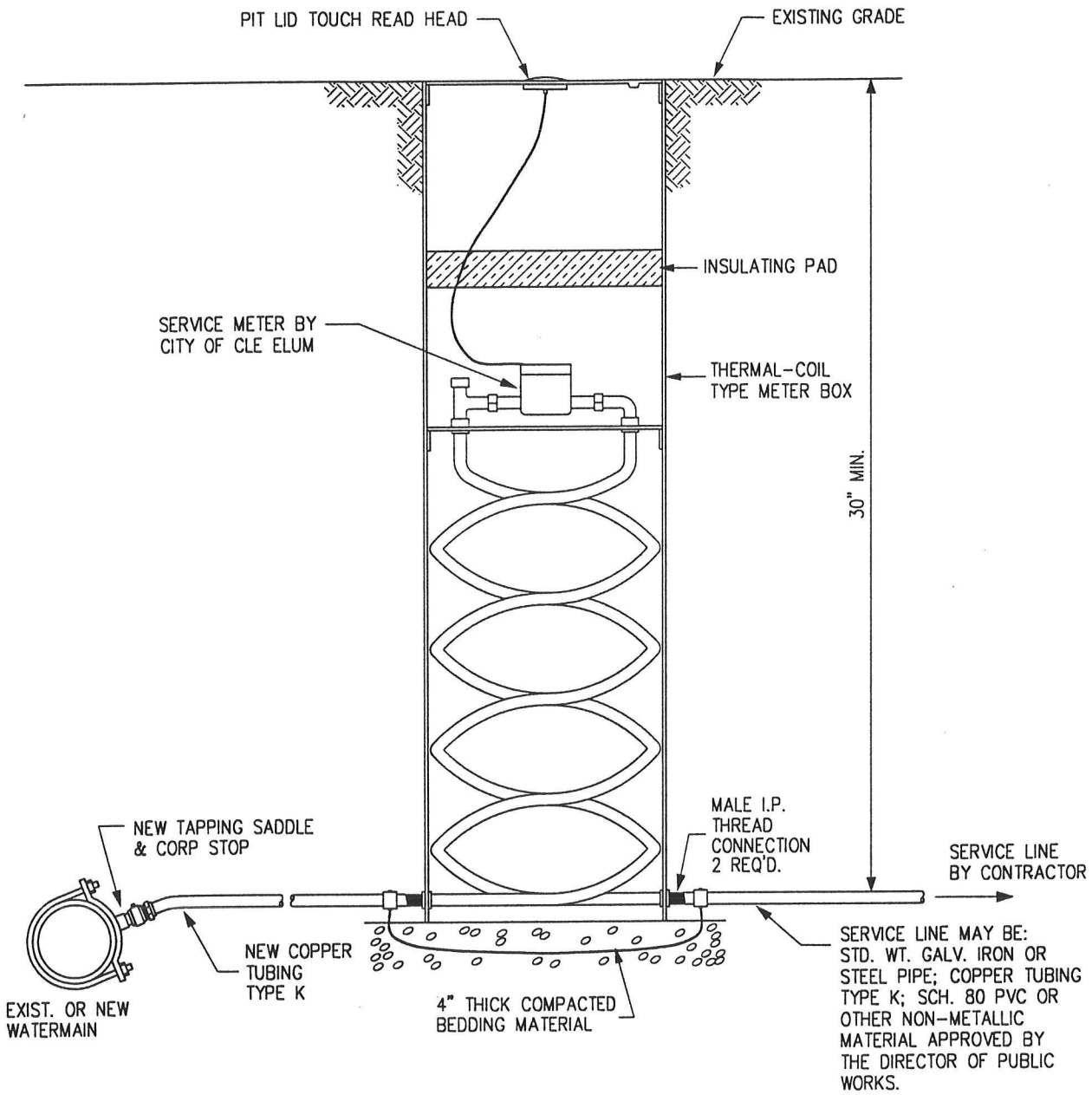

NOTE:
ONLY THE LATEST DETAIL, AS APPROVED BY THE DIRECTOR OF PUBLIC WORKS, SHALL BE USED.

Revision	Date	Description	Appr
ORIG.	1-21-02		

WATER SEVICE DETAIL	CITY OF CLE ELUM-STANDARD DETAIL	W-6

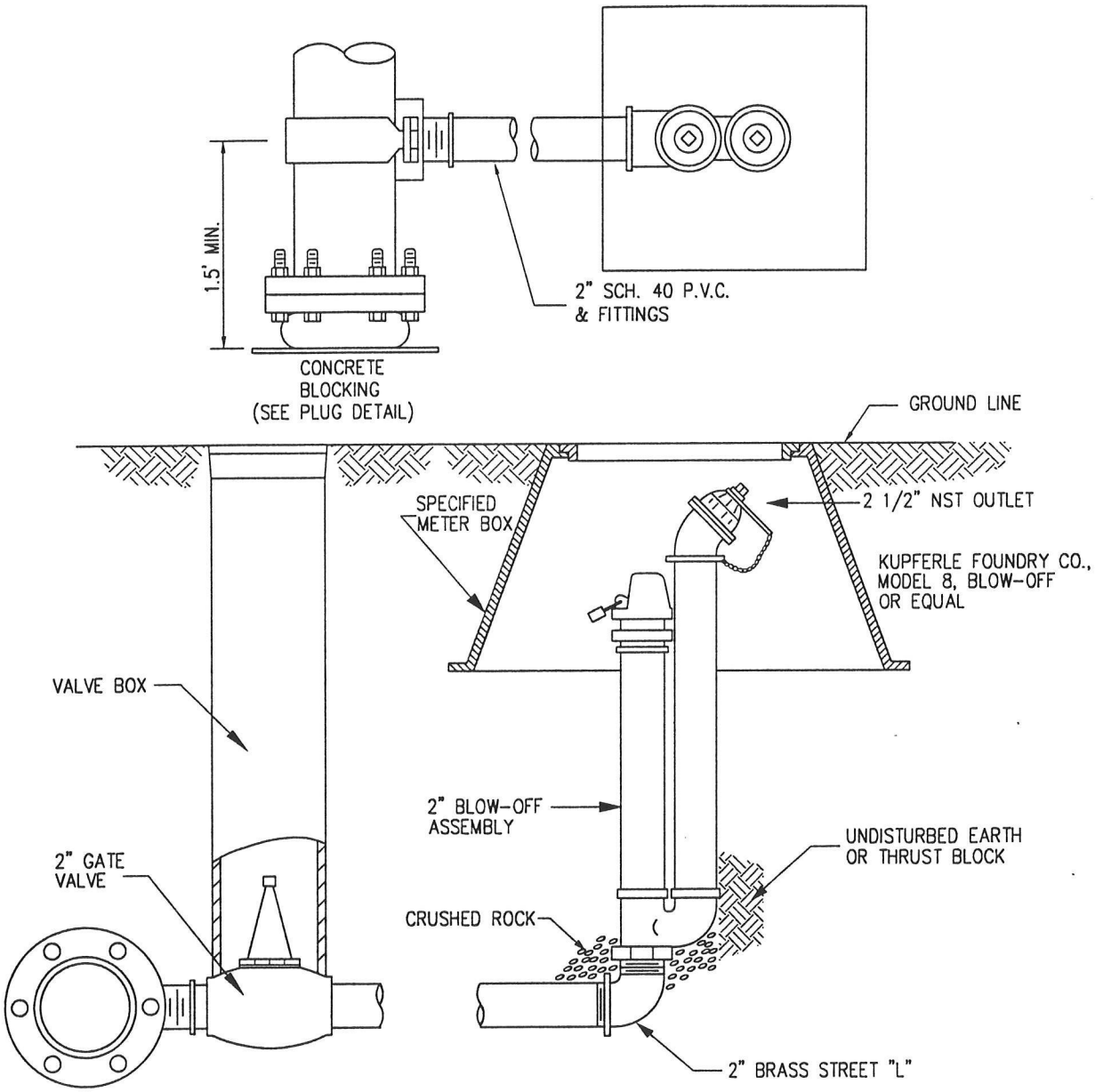

NOTE:
ONLY THE LATEST DETAIL, AS APPROVED BY
THE DIRECTOR OF PUBLIC WORKS, SHALL BE USED.

ORIG.	1-21-02		
Revision	Date	Description	Appr

BLOW-OFF-DETAIL	CITY OF CLE ELUM-STANDARD DETAIL	W-7

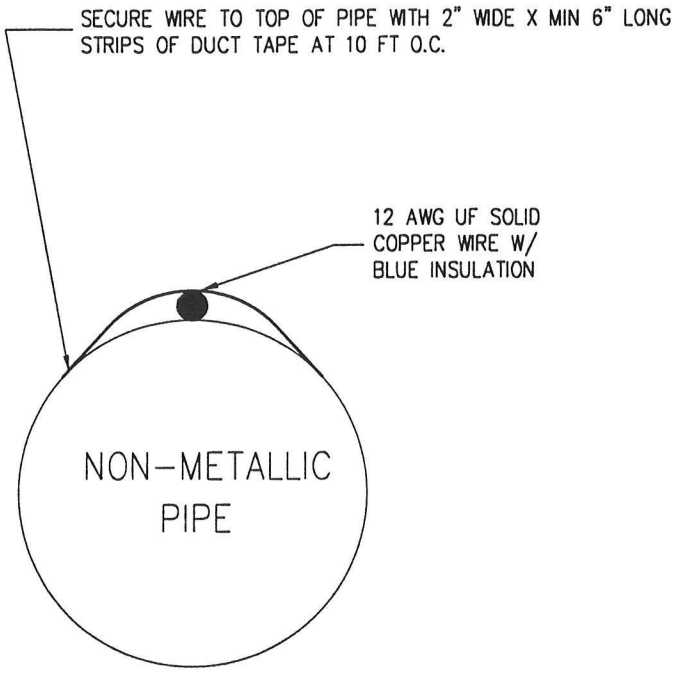

NOTES:

1. AT SPLICES THE CONNECTING ENDS OF THE WIRES SHALL BE OVERLAPPED AND TIED. THE ENDS SHALL BE STRIPPED AND CONNECTED WITH A WIRE NUT. WATERPROOF CONNECTION WITH SILICONE SPLICE KIT.
2. ACCESS TO LOCATING WIRE TERMINAL ENDS SHALL BE MADE AT ALL VALVE BOXES AND FIRE HYDRANTS, SECURE TO EXTERIOR OF VALVE BOXES AND HYDRANTS WITH STAINLESS STEEL PIPE STRAPS.

NOTE:
ONLY THE LATEST DETAIL, AS APPROVED BY THE DIRECTOR OF PUBLIC WORKS, SHALL BE USED.

Revision	Date	Description	Appr
ORIG.	1-21-02		

LOCATING WIRE	CITY OF CLE ELUM-STANDARD DETAIL	W-8

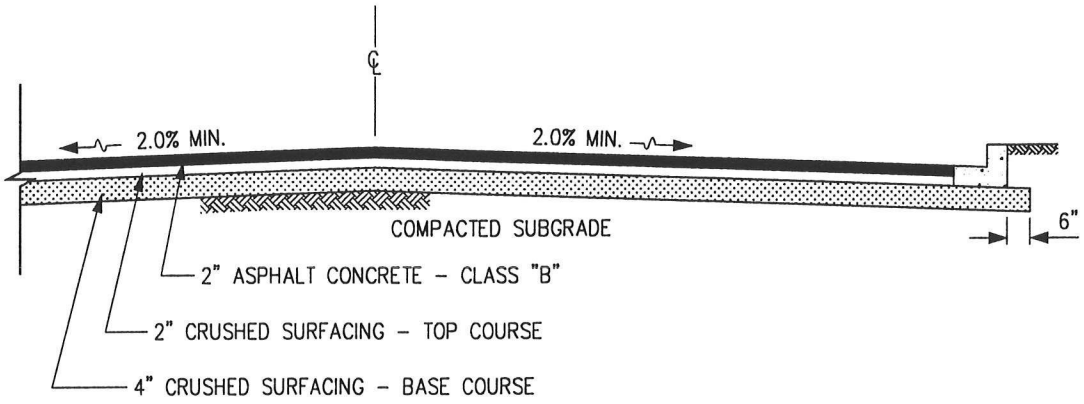

RESIDENTIAL ROADWAY SECTION

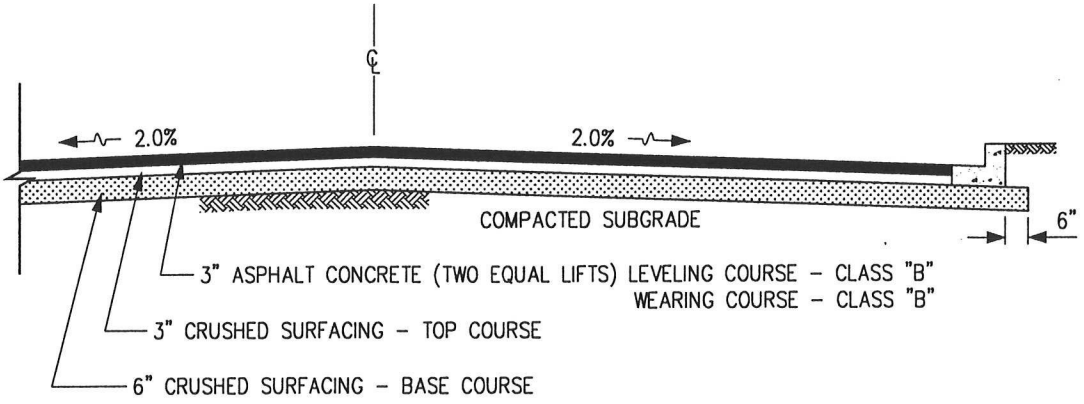

ARTERIAL ROADWAY SECTION

PAVING NOTES:

1. ALL THICKNESSES ARE COMPACTED DEPTHS.
2. CONTRACTOR WILL BE REQUIRED TO PAVE NEW ROADWAY IN TWO (2) PASSES.

NOTE:
ONLY THE LATEST DETAIL, AS APPROVED BY THE DIRECTOR OF PUBLIC WORKS, SHALL BE USED.

Revision	Date	Description	Appr
ORIG.	3-1-02		

ROADWAY SECTIONS	CITY OF CLE ELUM-STANDARD DETAIL	ST-1

* AS DIRECTED BY ENGINEER. MAY VARY DEPENDING UPON GRADE OF SIDEWALK AND DRIVEWAY BEYOND CURB.

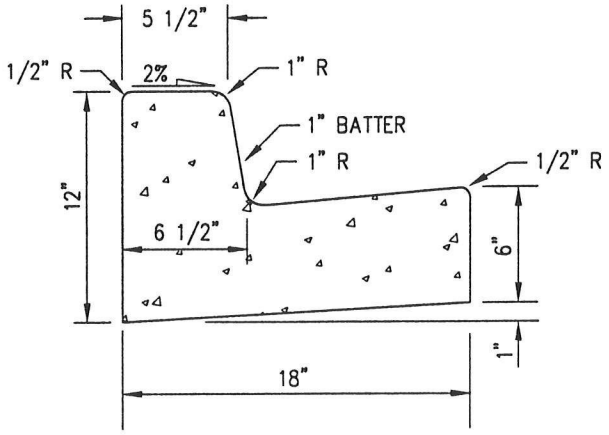

FULL HEIGHT – TYPE A

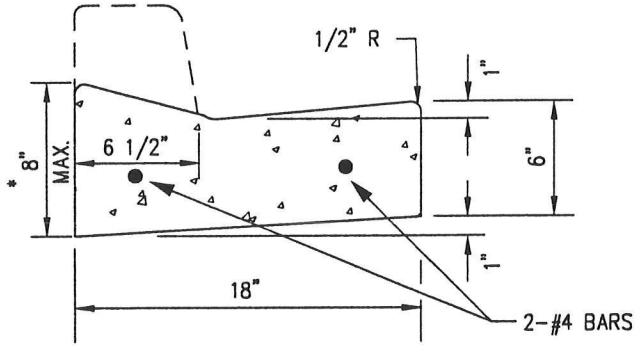

DEPRESSED – TYPE D

NOTE:
ONLY THE LATEST DETAIL, AS APPROVED BY THE DIRECTOR OF PUBLIC WORKS, SHALL BE USED.

Revision	Date	Description	Appr
ORIG.	3-1-02		

CONCRETE CURB & GUTTER	CITY OF CLE ELUM–STANDARD DETAIL	ST-2

SEE WSDOT STANDARD PLAN F-3
FOR ADDITIONAL INFORMATION

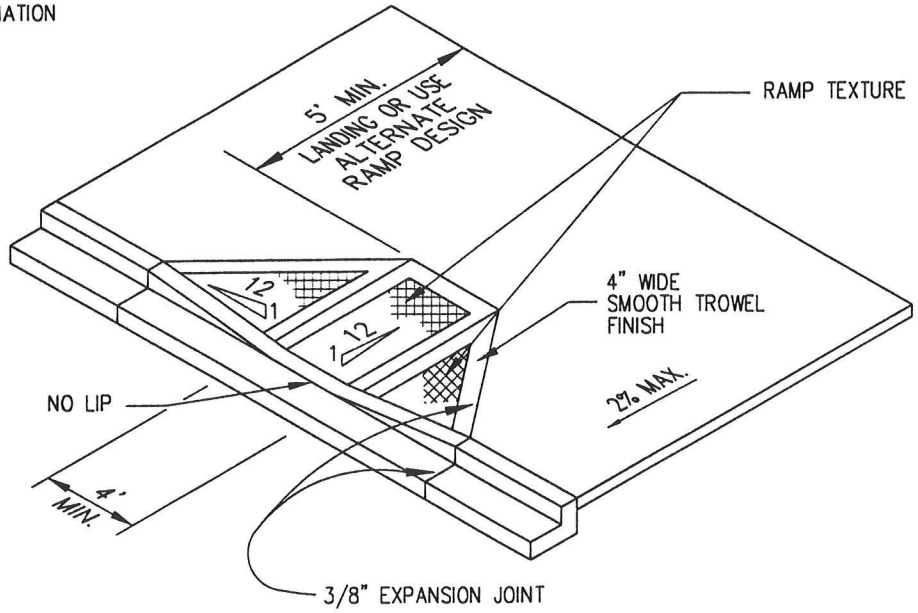

STANDARD

NOTES:

CURB RAMPS WILL NOT BE POURED INTEGRAL WITH SIDEWALK OR CURB & GUTTER, AND SHALL BE ISOLATED BY EXPANSION JOINT MATERIAL ON ALL SIDES BUT NOT AT THE END OF RAMP ADJACENT TO THE CURB.

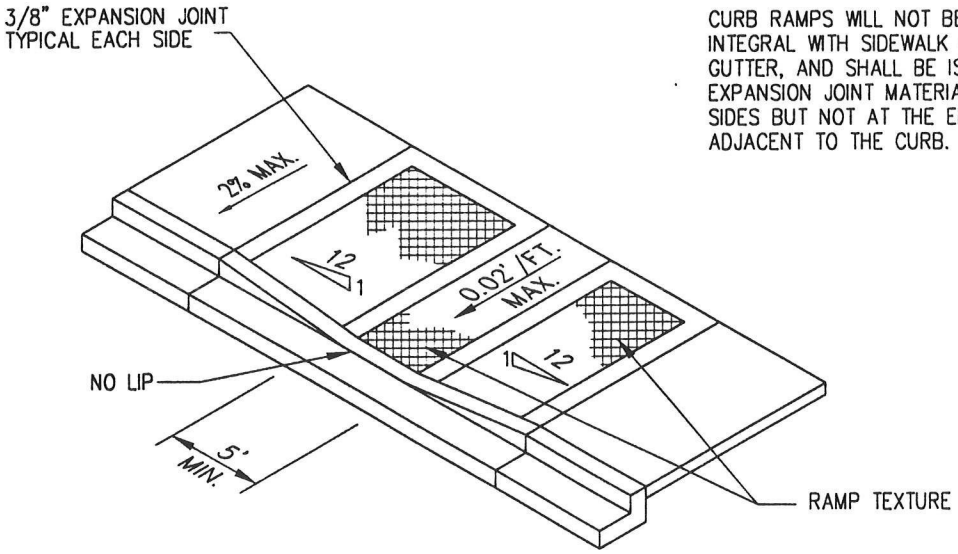

ALTERNATE

NOTE:
ONLY THE LATEST DETAIL, AS APPROVED BY THE DIRECTOR OF PUBLIC WORKS, SHALL BE USED.

Revision	Date	Description	Appr
ORIG.	3-1-02		

CURB RAMP	CITY OF CLE ELUM-STANDARD DETAIL	ST-3

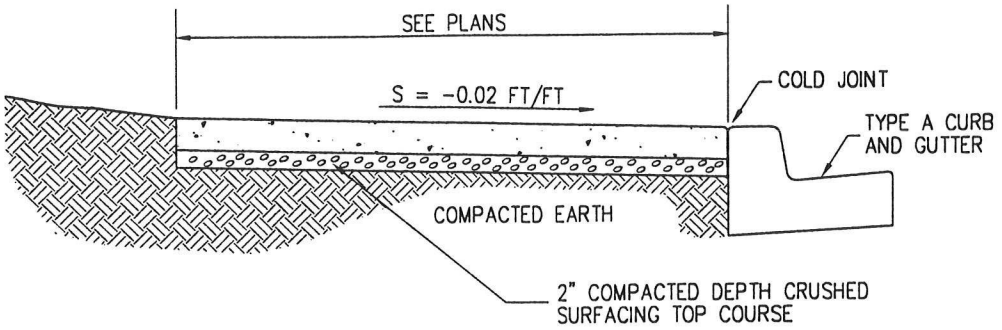

4" THICK SIDEWALK SECTION

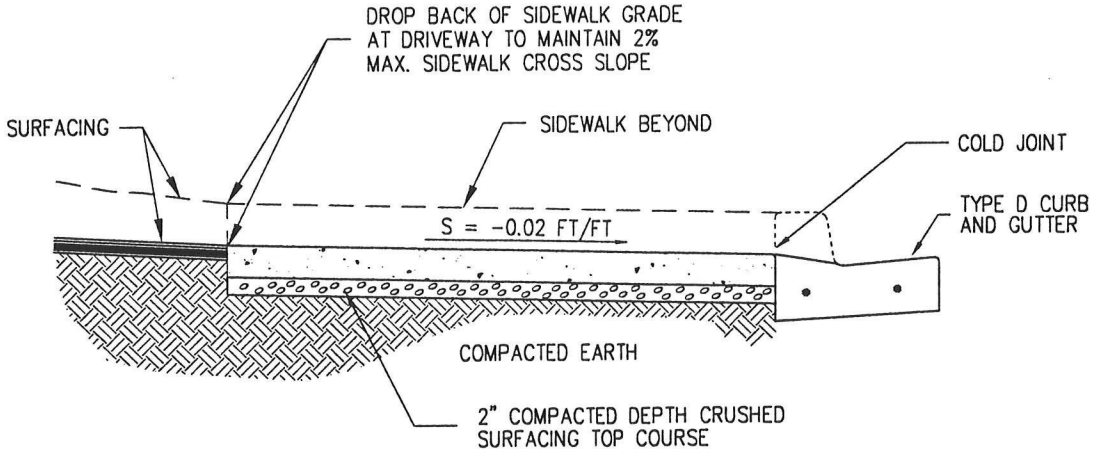

6" THICK SIDEWALK SECTION AT DRIVEWAYS

NOTE:
ONLY THE LATEST DETAIL, AS APPROVED BY
THE DIRECTOR OF PUBLIC WORKS, SHALL BE USED.

Revision	Date	Description	Appr
ORIG.	3-1-02		

SIDEWALK SECTIONS	CITY OF CLE ELUM-STANDARD DETAIL	ST-4

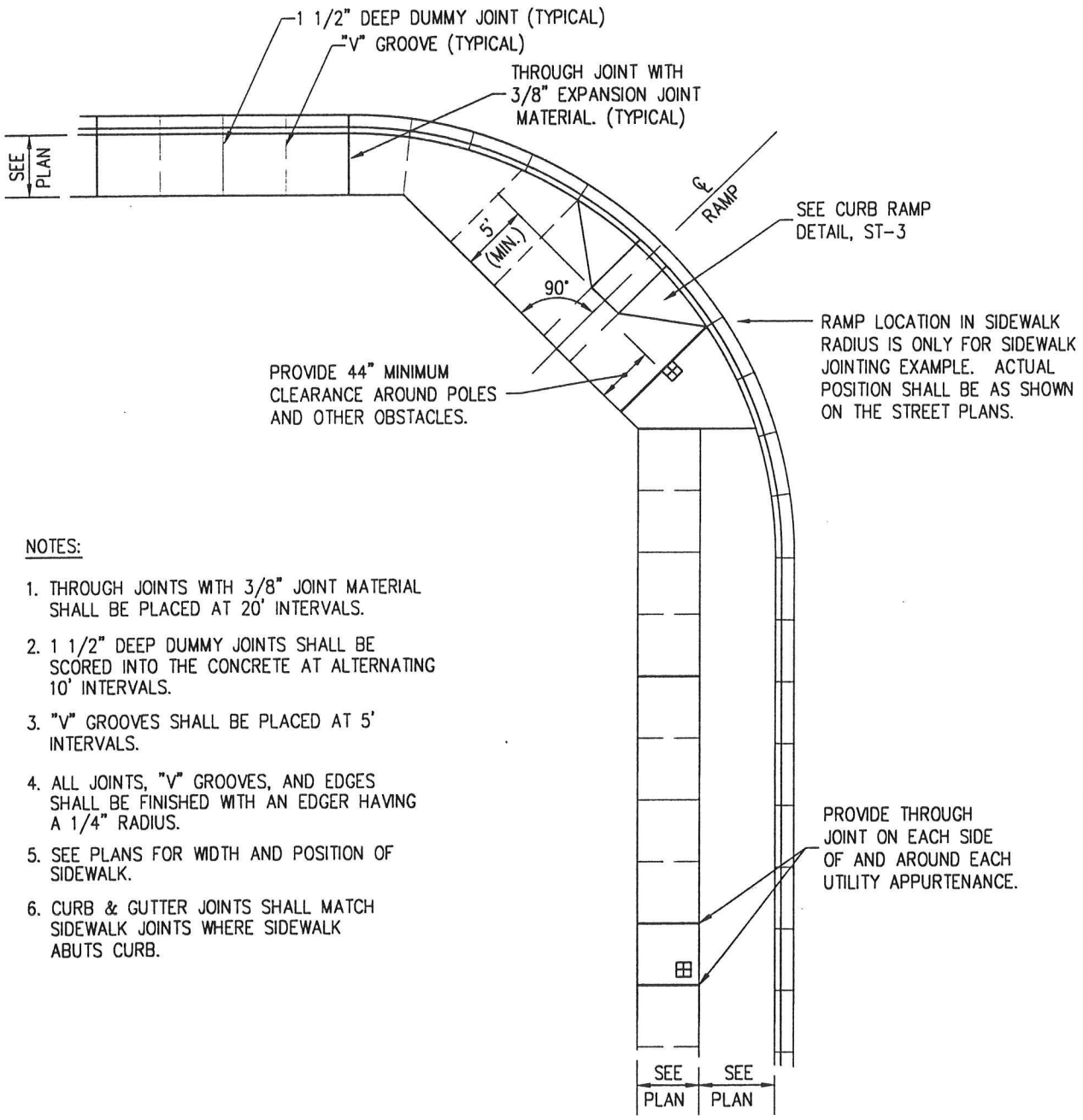

NOTES:

1. THROUGH JOINTS WITH 3/8" JOINT MATERIAL SHALL BE PLACED AT 20' INTERVALS.
2. 1 1/2" DEEP DUMMY JOINTS SHALL BE SCORED INTO THE CONCRETE AT ALTERNATING 10' INTERVALS.
3. "V" GROOVES SHALL BE PLACED AT 5' INTERVALS.
4. ALL JOINTS, "V" GROOVES, AND EDGES SHALL BE FINISHED WITH AN EDGER HAVING A 1/4" RADIUS.
5. SEE PLANS FOR WIDTH AND POSITION OF SIDEWALK.
6. CURB & GUTTER JOINTS SHALL MATCH SIDEWALK JOINTS WHERE SIDEWALK ABUTS CURB.

NOTE:
ONLY THE LATEST DETAIL, AS APPROVED BY THE DIRECTOR OF PUBLIC WORKS, SHALL BE USED.

Revision	Date	Description	Appr
ORIG.	3-1-02		

SIDEWALK JOINTING	CITY OF CLE ELUM-STANDARD DETAIL	ST-5

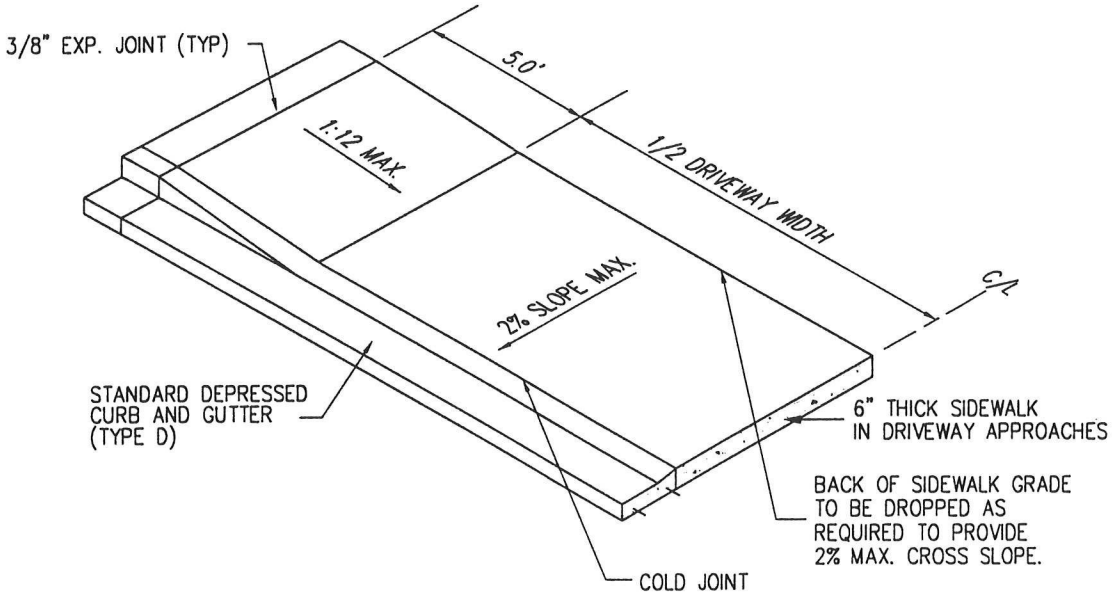

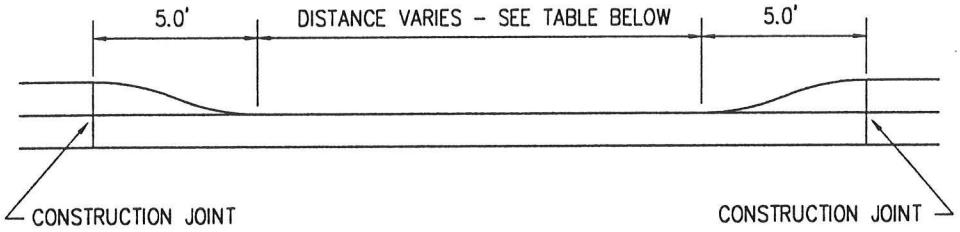

REFER TO CLE ELUM MUNICIPAL CODE

RESIDENTIAL DRIVEWAYS - 20' MAXIMUM WIDTH

COMMERCIAL APPROACHES WITH RADIUS CURB RETURNS SHALL BE REVIEWED AND APPROVED BY THE PUBLIC WORKS DIRECTOR ON A CASE BY CASE BASIS.

NOTE:
ONLY THE LATEST DETAIL, AS APPROVED BY THE DIRECTOR OF PUBLIC WORKS, SHALL BE USED.

ORIG.	3-1-02		
Revision	Date	Description	Appr

DRIVEWAY APPROACHES	CITY OF CLE ELUM-STANDARD DETAIL	ST-6

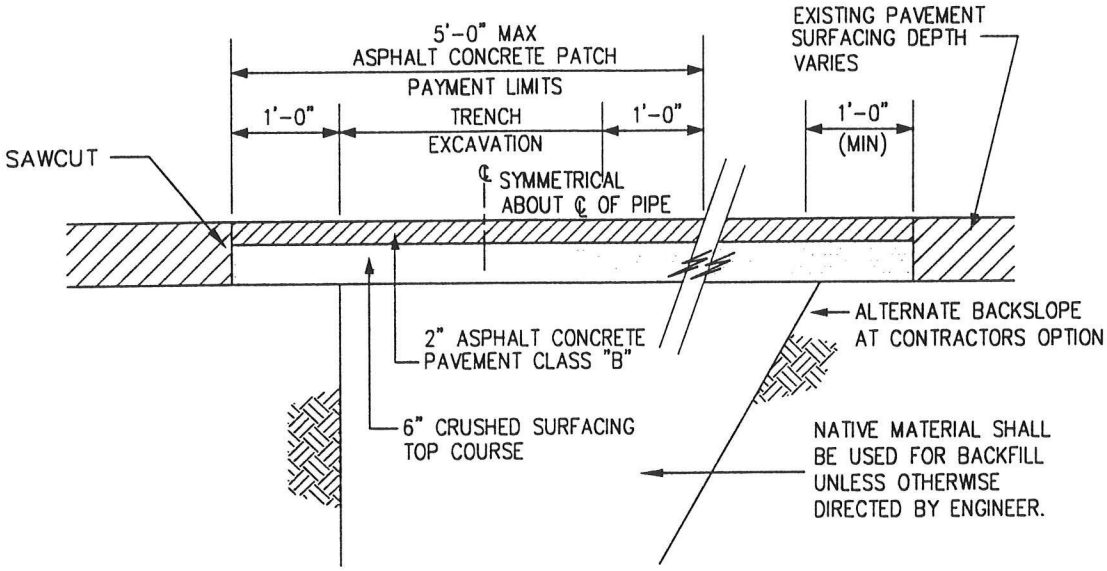

ASPHALT PAVEMENT REPAIR

ALLEYS, STREETS, AND PARKING AREAS

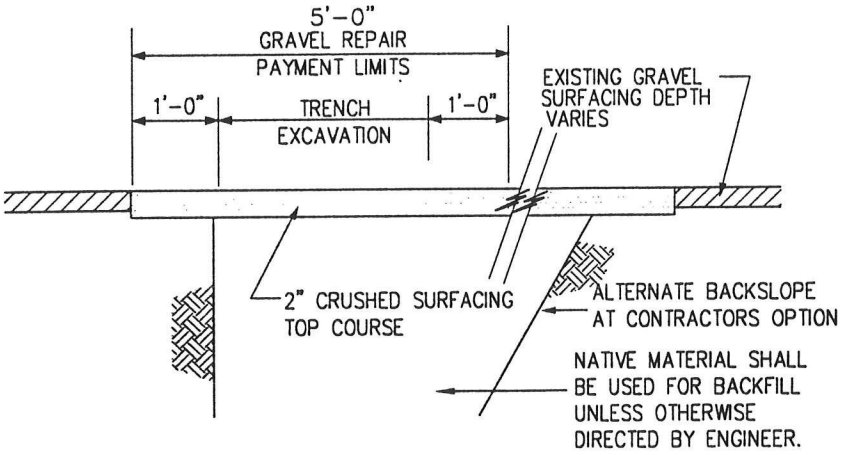

GRAVEL SURFACE REPAIR

GRAVEL AREAS

NOTE:

CONTRACTOR SHALL BE RESPONSIBLE FOR ALL TRENCH SURFACE RESTORATION BEYOND THE PAYMENT LIMITS SHOWN, INCLUDING WIDER TRENCH SECTIONS RESULTING FROM LAYING BACK TRENCH SIDE AT THE CONTRACTORS OPTION. NO MEASUREMENT OR PAYMENT WILL WILL BE MADE FOR SURFACE REPAIR BEYOND THE PAYMENT LIMITS.

ORIG.	3-1-02		
Revision	Date	Description	Appr

PATCHING/REPAIR DETAIL	CITY OF CLE ELUM-STANDARD DETAIL	ST-7

PAVEMENT PATCHING DETAIL

NOTE:

CONTRACTOR SHALL BE RESPONSIBLE FOR ALL TRENCH SURFACE RESTORATION BEYOND THE PAYMENT LIMITS SHOWN, INCLUDING WIDER TRENCH SECTIONS RESULTING FROM LAYING BACK TRENCH SIDE AT THE CONTRACTORS OPTION. NO MEASUREMENT OR PAYMENT WILL WILL BE MADE FOR SURFACE REPAIR BEYOND THE PAYMENT LIMITS.

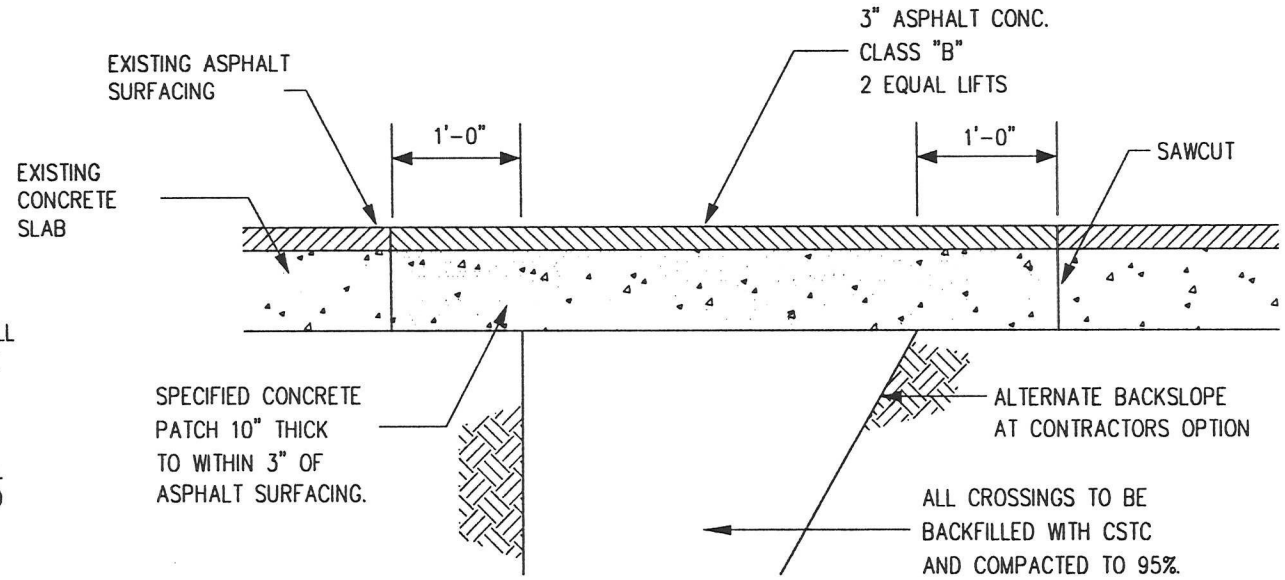

ASPHALT PAVEMENT REPAIR (CONCRETE)

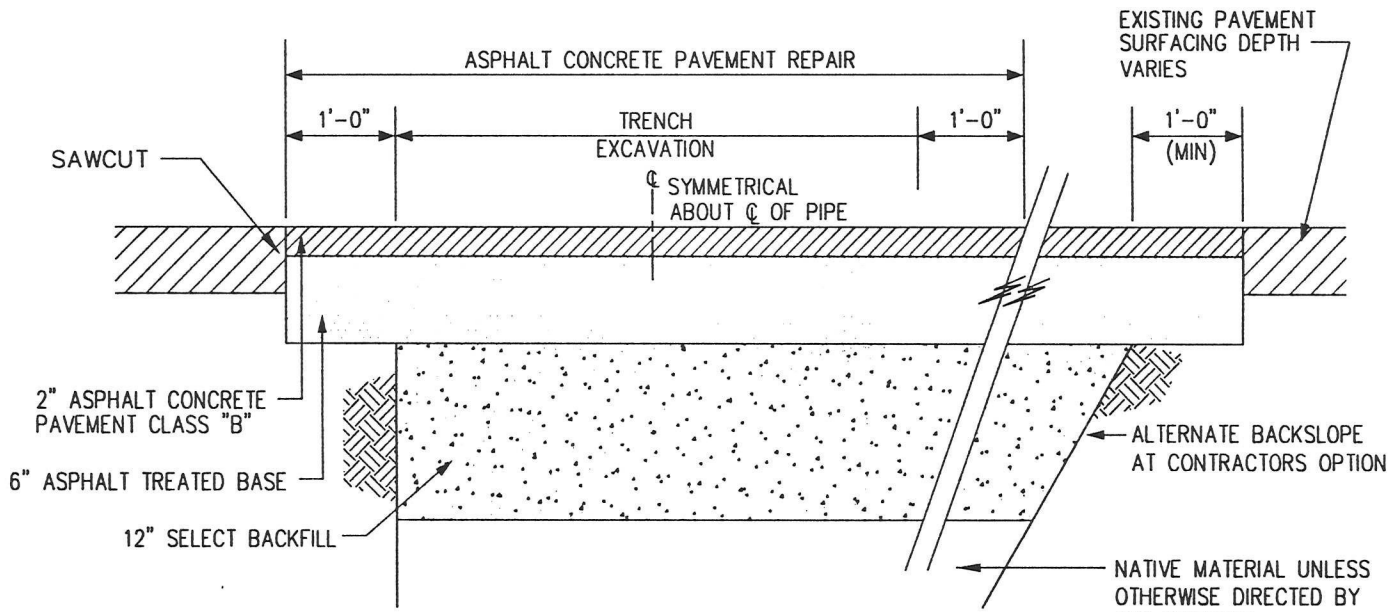

ASPHALT PAVEMENT REPAIR (ATB)

Revision	Date	Description	Appr
ORIG.	3-1-02		

CITY OF CLE ELUM-STANDARD DETAIL

ST-8

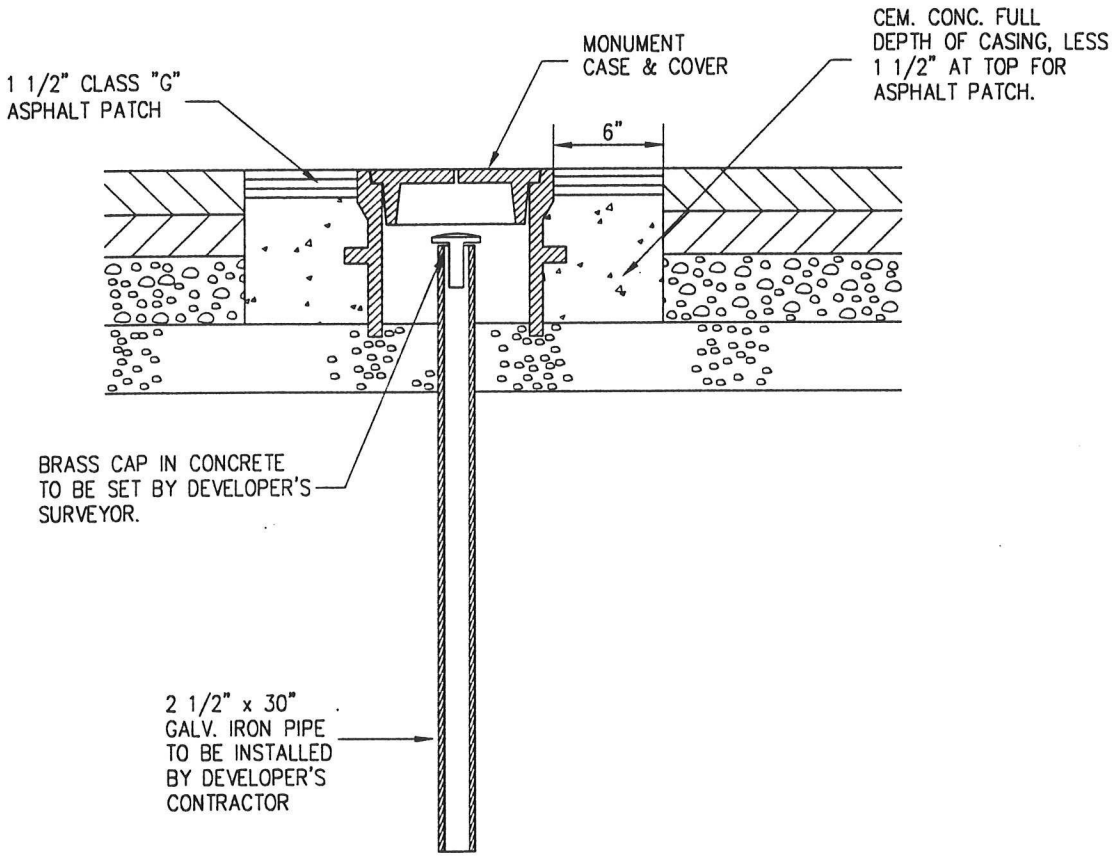

NOTES:

1. TOP OF MONUMENT SHALL BE BETWEEN 6" AND 12" BELOW FINISH GRADE
2. MONUMENT, MONUMENT CASE AND COVER TO BE PLACED AFTER FINAL LIFT OF ASPHALT.

NOTE:
ONLY THE LATEST DETAIL, AS APPROVED BY THE DIRECTOR OF PUBLIC WORKS, SHALL BE USED.

Revision	Date	Description	Appr
ORIG.	3-1-02		

MONUMENT	CITY OF CLE ELUM-STANDARD DETAIL	ST-9

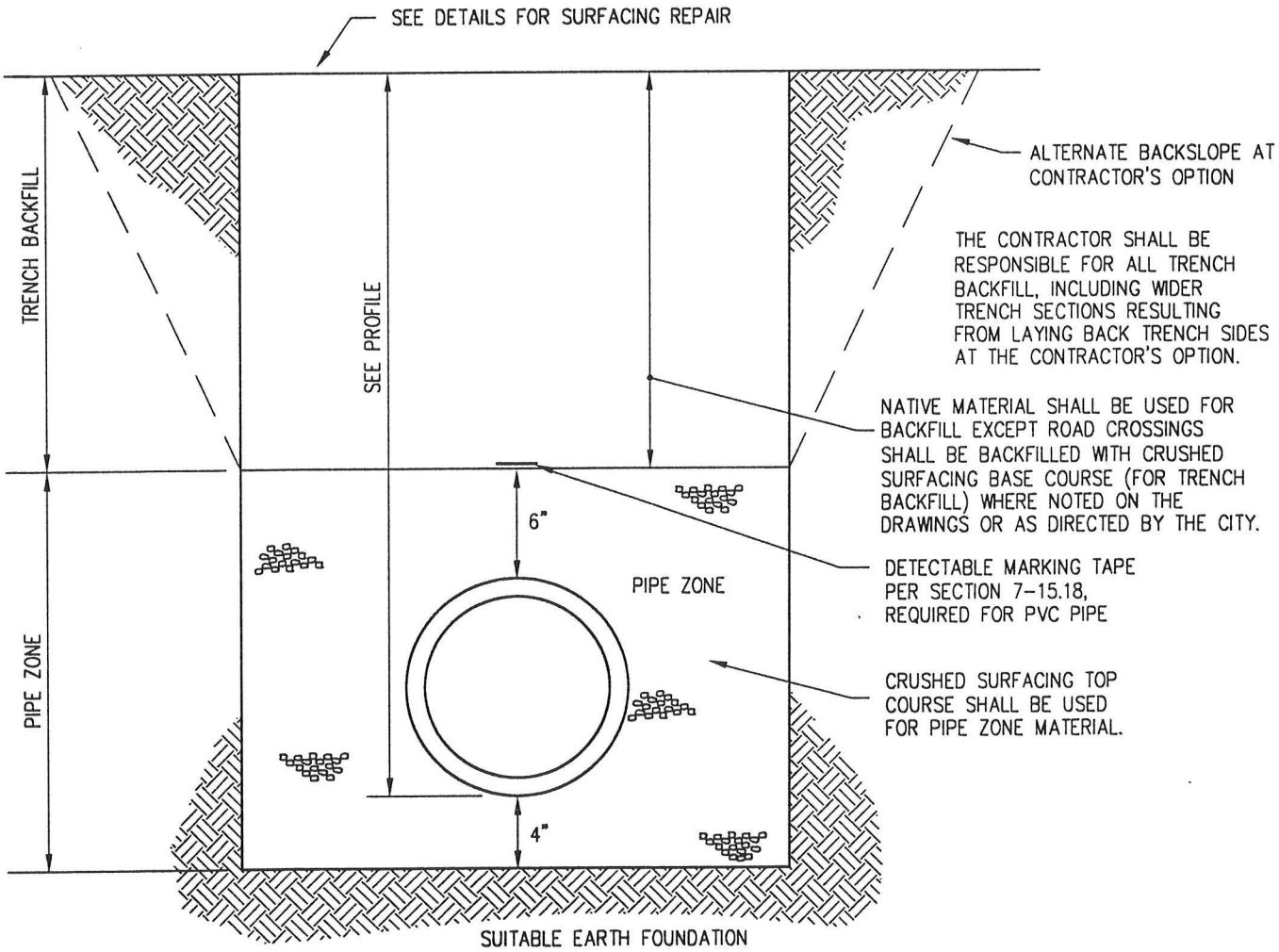

NOTE:
ONLY THE LATEST DETAIL, AS APPROVED BY THE DIRECTOR OF PUBLIC WORKS, SHALL BE USED.

Revision	Date	Description	Appr
ORIG.	1-21-02		

PVC SEWER AND STORM DRAIN TRENCH SECTION	CITY OF CLE ELUM-STANDARD DETAIL	S-1

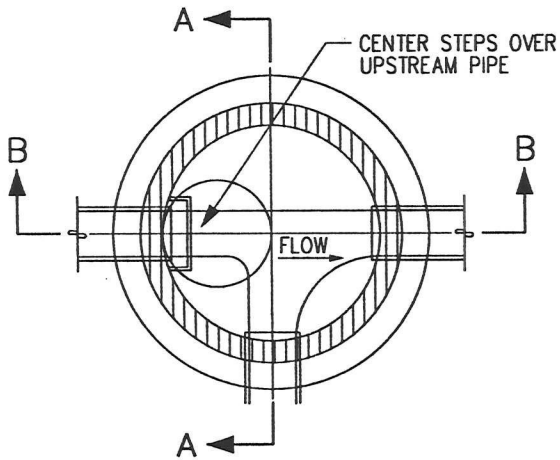

PLAN VIEW

FOR MANHOLES LESS THAN
8' HIGH, USE SHALLOW MANHOLE.

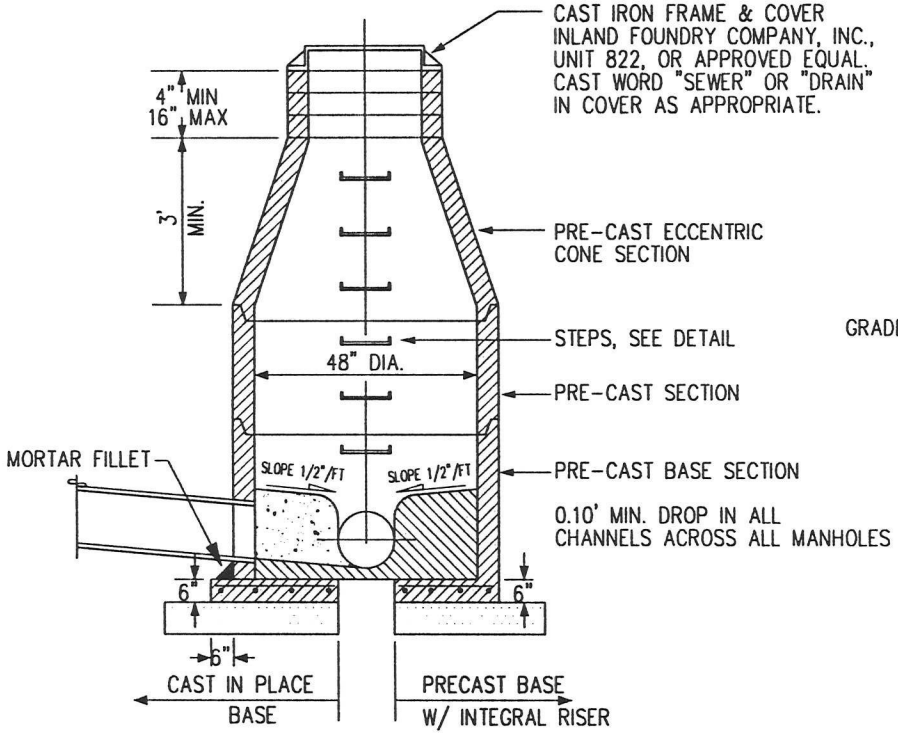

SECTION A–A

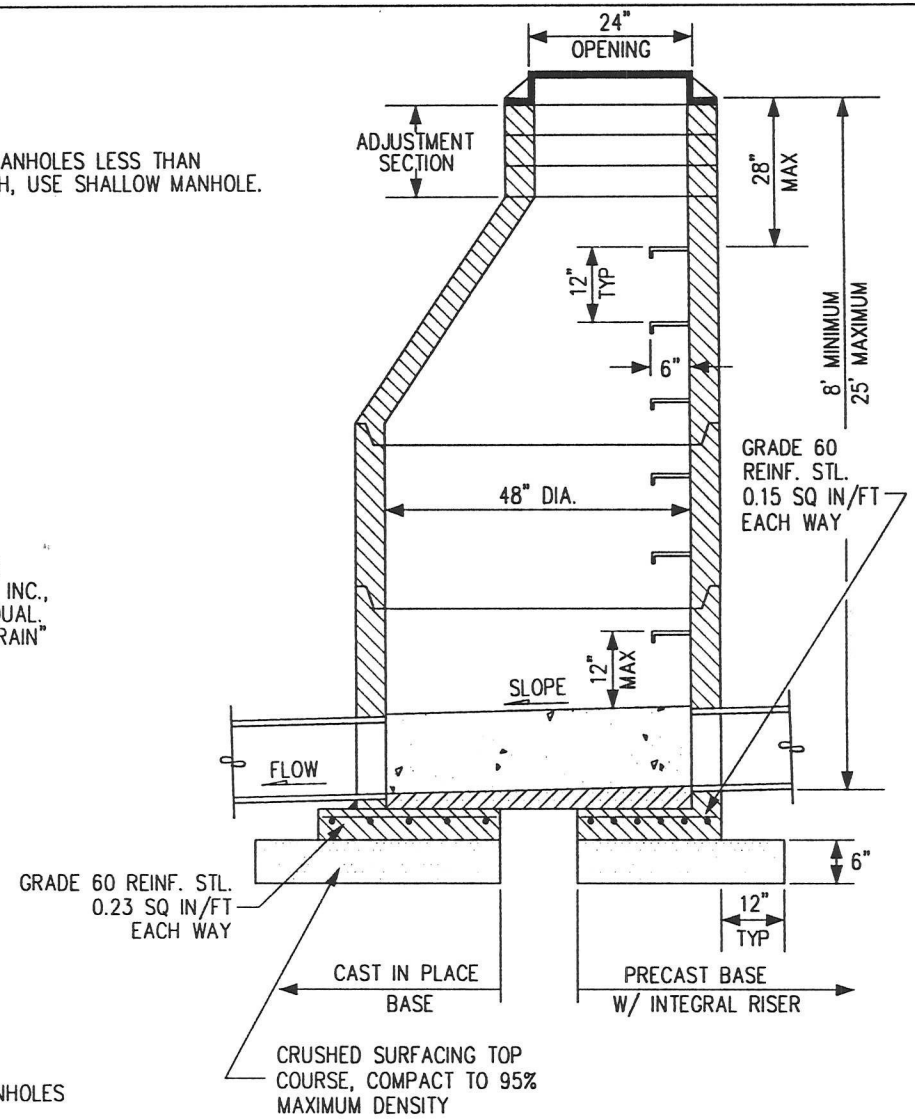

SECTION B–B

NOTE:
ONLY THE LATEST DETAIL, AS APPROVED BY
THE DIRECTOR OF PUBLIC WORKS, SHALL BE USED.

Revision	Date	Description	Appr
ORIG.	1–21–02		

MANHOLE (TYPE 1)

CITY OF CLE ELUM–STANDARD DETAIL

S–2

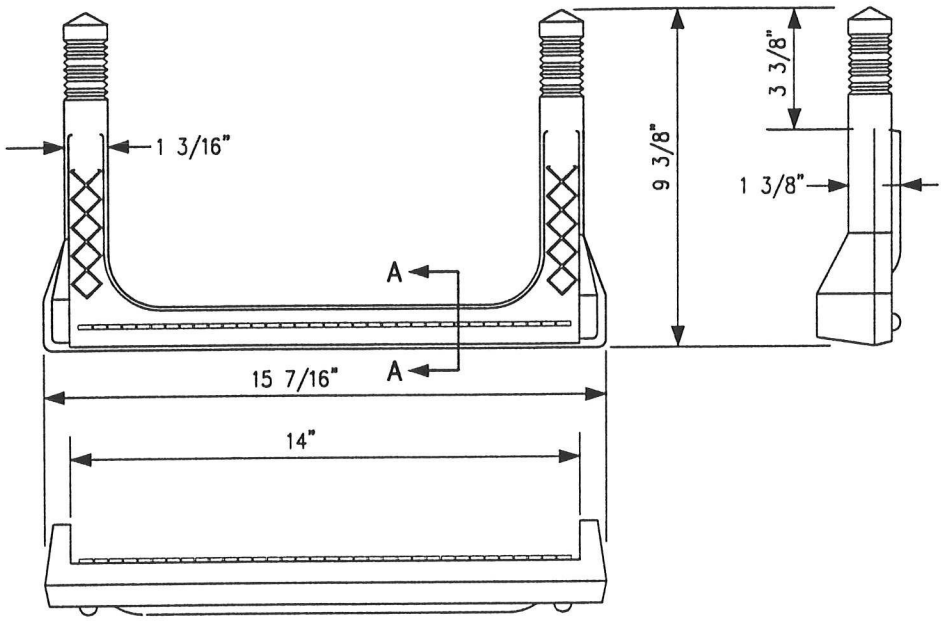

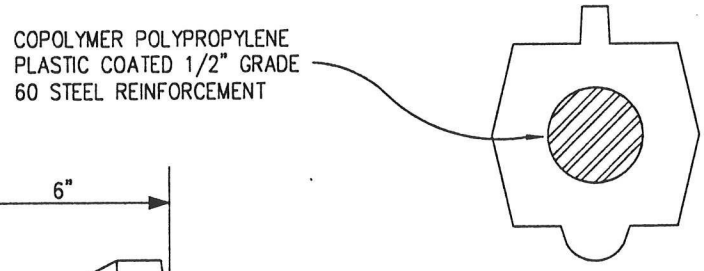

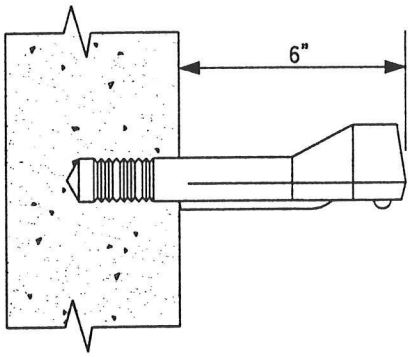

SECTION A–A

NOTE:
MANHOLE STEPS SHALL BE COPOLYMER POLYPROPYLENE PLASTIC COATED 1/2" GRADE 60 STEEL REINFORCEMENT, MODEL PS2–PF, AS MANUFACTURED BY M.A. INDUSTRIES INC., OR APPROVED EQUAL

NOTE:
ONLY THE LATEST DETAIL, AS APPROVED BY THE DIRECTOR OF PUBLIC WORKS, SHALL BE USED.

Revision	Date	Description	Appr
ORIG.	1–21–02		

MANHOLE SAFETY STEP	CITY OF CLE ELUM–STANDARD DETAIL	S–3

NOTES:

1. CAST IRON FRAME & COVER SHALL BE INLAND FOUNDRY COMPANY INC., UNIT 247 OR APPROVED EQUAL.

2. IN UNPAVED AREAS, SET FRAME & COVER FLUSH WITH FINISHED GRADE. EXTEND 12" THICK, 2' DIAMETER, CEMENT CONCRETE RING FLUSH WITH FRAME AND SLOPE OUTWARD AT 1/4"/FT.

3. CLEANOUT PIPE SHALL BE 8" DIA. PVC SEWER PIPE IN ACCORDANCE W/ THE STANDARD SPECS.

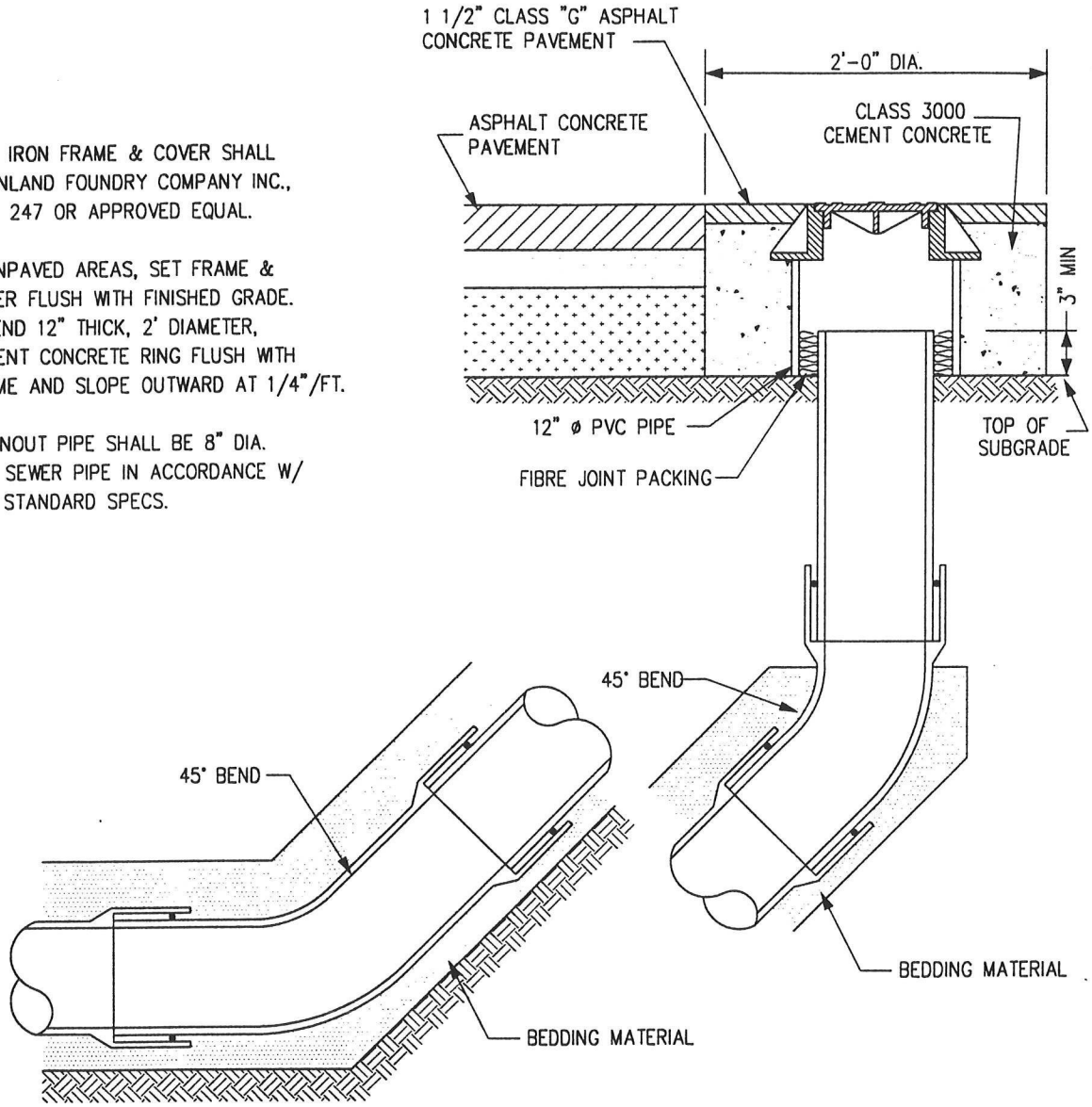

NOTE:
ONLY THE LATEST DETAIL, AS APPROVED BY THE DIRECTOR OF PUBLIC WORKS, SHALL BE USED.

Revision	Date	Description	Appr
ORIG.	1-21-02		

SANITARY SEWER CLEANOUT	CITY OF CLE ELUM-STANDARD DETAIL	S-4

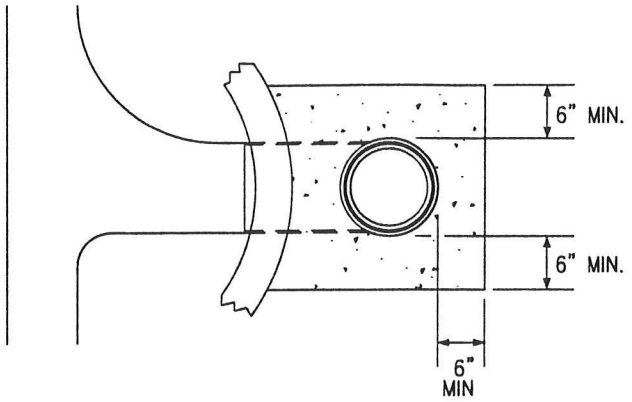

SECTION A–A

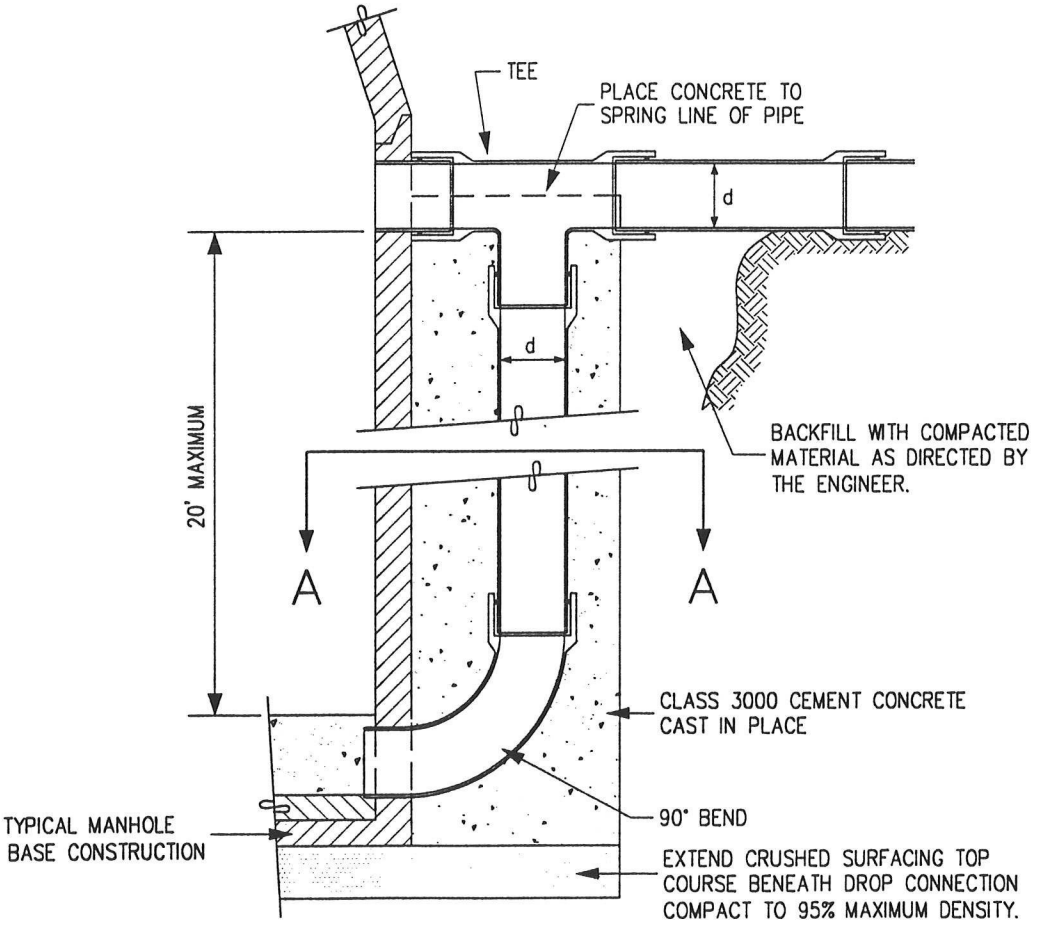

PROFILE VIEW

NOTE:
ONLY THE LATEST DETAIL, AS APPROVED BY
THE DIRECTOR OF PUBLIC WORKS, SHALL BE USED.

ORIG.	1-21-02		
Revision	Date	Description	Appr

DROP CONNECTION	CITY OF CLE ELUM–STANDARD DETAIL	S–5

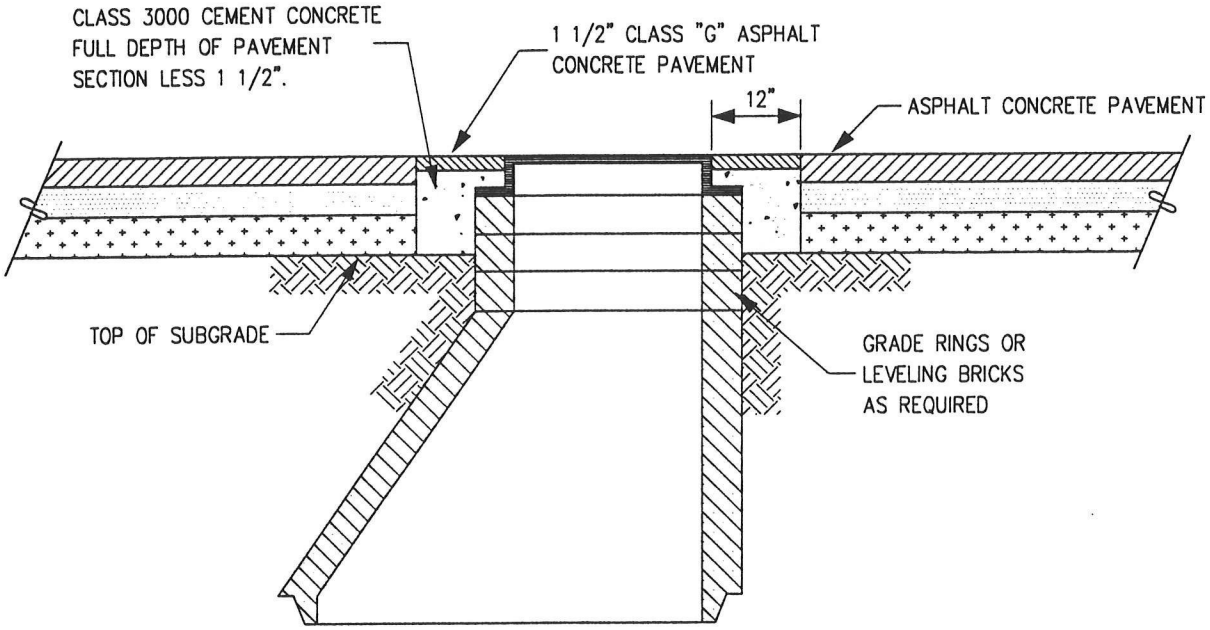

NOTES:

1. MANHOLES SHALL BE ADJUSTED TO FINISHED GRADE AFTER PLACEMENT OF ASPHALT CONCRETE PAVEMENT.

2. GRADE RINGS AND/OR LEVELING BRICKS SHALL BE GROUTED IN PLACE AND BE WATER TIGHT.

3. IN UNPAVED AREAS, PROVIDE 12" THICK, 5' DIA. CEMENT CONCRETE RING AROUND TOP OF MANHOLE. SET MANHOLE FRAME FLUSH W/ FINISHED GRADE AND SLOPE CONCRETE OUTWARD AT 1/4"/FT.

NOTE:
ONLY THE LATEST DETAIL, AS APPROVED BY THE DIRECTOR OF PUBLIC WORKS, SHALL BE USED.

Revision	Date	Description	Appr
ORIG.	1-21-02		

MANHOLE ADJUSTMENT DETAIL	CITY OF CLE ELUM-STANDARD DETAIL	S-6

NOTES:
1. SERVICE CONNECTIONS 8" OR LARGER MUST BE MADE AT MANHOLE.
2. IF 5' MAXIMUM SLOPED DISTANCE IS INSUFFICIENT FOR SIDE SEWER CONNECTION, INSTALL SIDE SEWER RISER PER DETAIL.
3. ROTATE SANITARY SEWER MAIN TEE OR WYE 45° UPWARD.
4. TEES OR WYES SHALL BE INSTALLED IN NEW SANITARY SEWER MAINS. WHEN INSTALLING SIDE SEWERS IN EXISTING MAINS, CONNECTION SHALL BE MADE BY MACHINE MADE TAP AND APPROVED SADDLE.
5. WHERE DEPTH IS INSUFFICIENT TO ALLOW CONNECTION AS SHOWN, CONNECT SERVICE AS DIRECTED BY ENGINEER.
6. TERMINATE SIDE SEWER AT R/W LINE UNLESS OTHERWISE DIRECTED BY ENGINEER OR SHOWN OTHERWISE ON PLANS.
7. ALL SIDE SEWER MATERIALS SHALL BE PVC SEWER PIPE CONFORMING TO THE REQUIREMENTS OF SECTION 9-05.12 OF THE STD. SPECS.

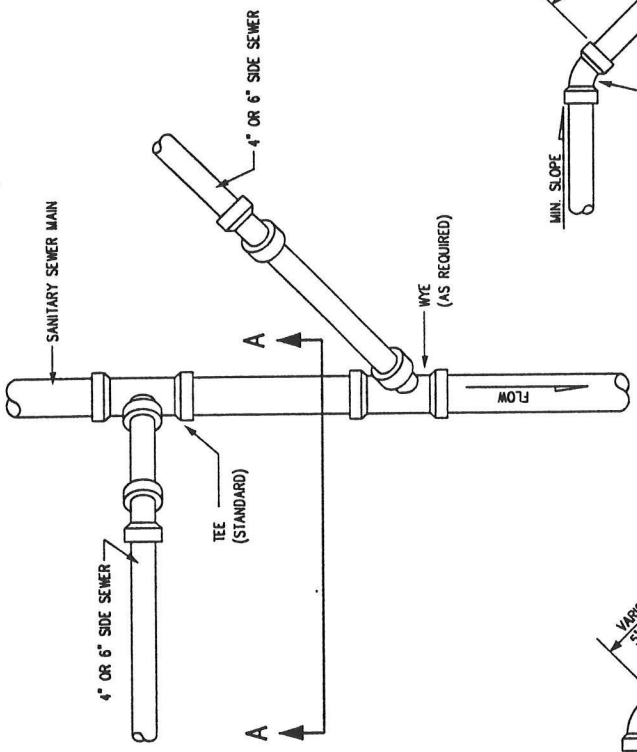

PLAN

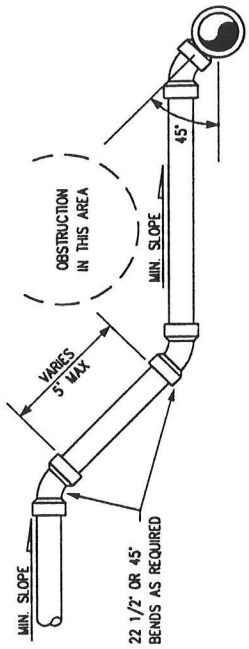

CONNECTION AT OBSTRUCTION

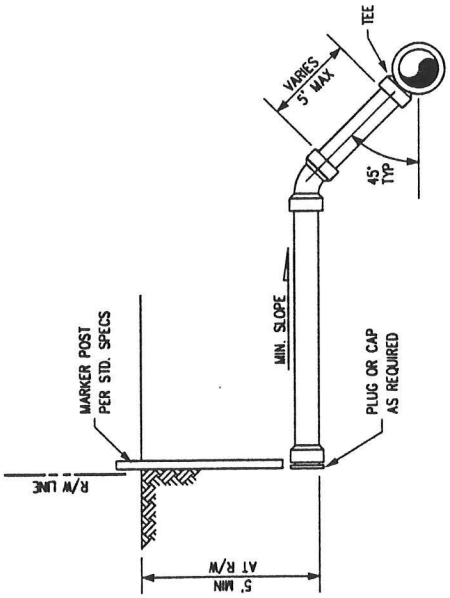

SECTION A-A

NOTE:
ONLY THE LATEST DETAIL, AS APPROVED BY THE DIRECTOR OF PUBLIC WORKS, SHALL BE USED.

Revision	Date	Description	Appr
ORIG.	1-21-02		

SIDE SEWER DETAIL	CITY OF CLE ELUM-STANDARD DETAIL	S-7

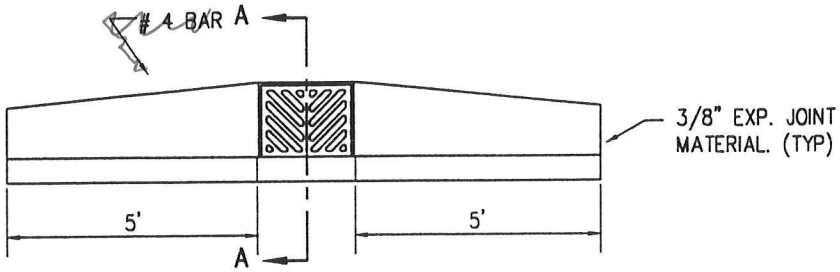

PLAN

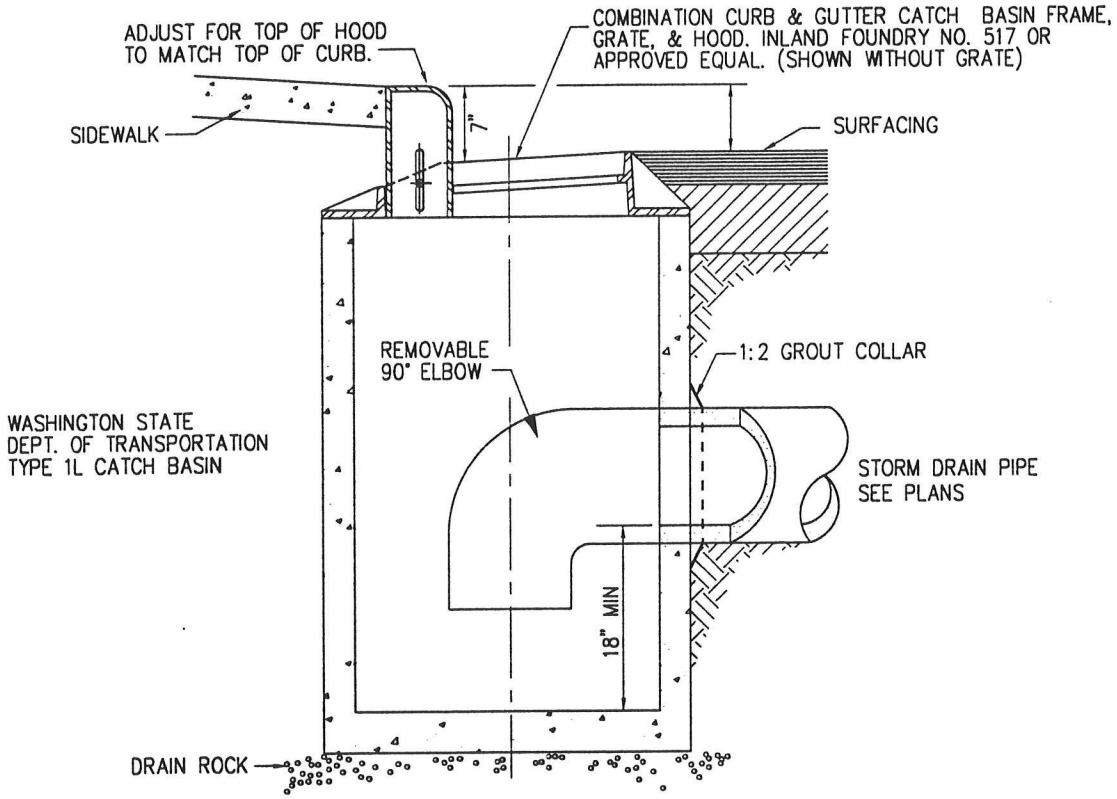

SECTION A - A

NOTE:
ONLY THE LATEST DETAIL, AS APPROVED BY THE DIRECTOR OF PUBLIC WORKS, SHALL BE USED.

Revision	Date	Description	Appr
ORIG.	1-21-02		

30" DIA. CATCH BASIN	CITY OF CLE ELUM-STANDARD DETAIL	D-1